2026 PRODUCT CATALOG

INTEGRATED ELECTRO-OPTICS PLATFORMS

Ex-Sight.Com
ONE SHOT

EX-SIGHT ADVANCED ELECTRO-OPTICS

2026 PRODUCT CATALOG

Ex-Sight.Com
ONE SHOT



Ex-Sight is an Israeli technology company founded in 2008 and based in Tirat Carmel, Israel. Ex-Sight develops robust software-powered electro-optical systems for various markets.

We specialize in OEM integration, allowing partners to rebrand our products.

Ex-Sight.Com
ONE SHOT




Ex-Sight.Com
Ex-Sight.Com
Ex-Sight.Com
Ex-Sight.Com


Ex-Sight.Com
ALMA


Ex-Sight.Com
Ex-Sight.Com
Ex-Sight.Com

INTEGRATED ELECTRO-OPTICS PRODUCTS



DEEPSIGHT SOFTWARE

Advanced Integrated Electro Optic Development Platform 5



MICROSENSOR

Miniature Rugged LWIR / Low Light Electro-Optic Sensor 7



SITUATIONAL AWARENESS

Rugged 360/180 Day & Night Electro-Optic Panoramic Staring System 16



AVIGAIL-SERIES

Top-View 24/7 EO Payload 20



DEEPSIGHT

Integrated Electro-Optic Development Platform 25



DEEPSPHERE

Integrated Electro-Optic Development Gimbal 38



SPHERE-SERIES

Dual Sensor Rugged Gimbal 42



HDPT-SERIES

Heavy Duty Stabilized Pan Tilt Positioners 46

OZ SERIES

Rugged Day & Night Driver Vision Enhancer and Electro-Optic Tracker 64



FUSION SERIES

Rugged Dual Sensor Driver Vision Enhancer (DVE) 68



xEye SERIES

Micro Rugged VIS/LWIR Single Sensor Driver Vision Enhancer (DVE) 72

AIx SERIES

Rugged AI Neural Processing Unit 80

Ex-Sight.Com
ONE SHOT

DEEPSIGHT Software

Advanced Integrated Electro-Optic Development Platform

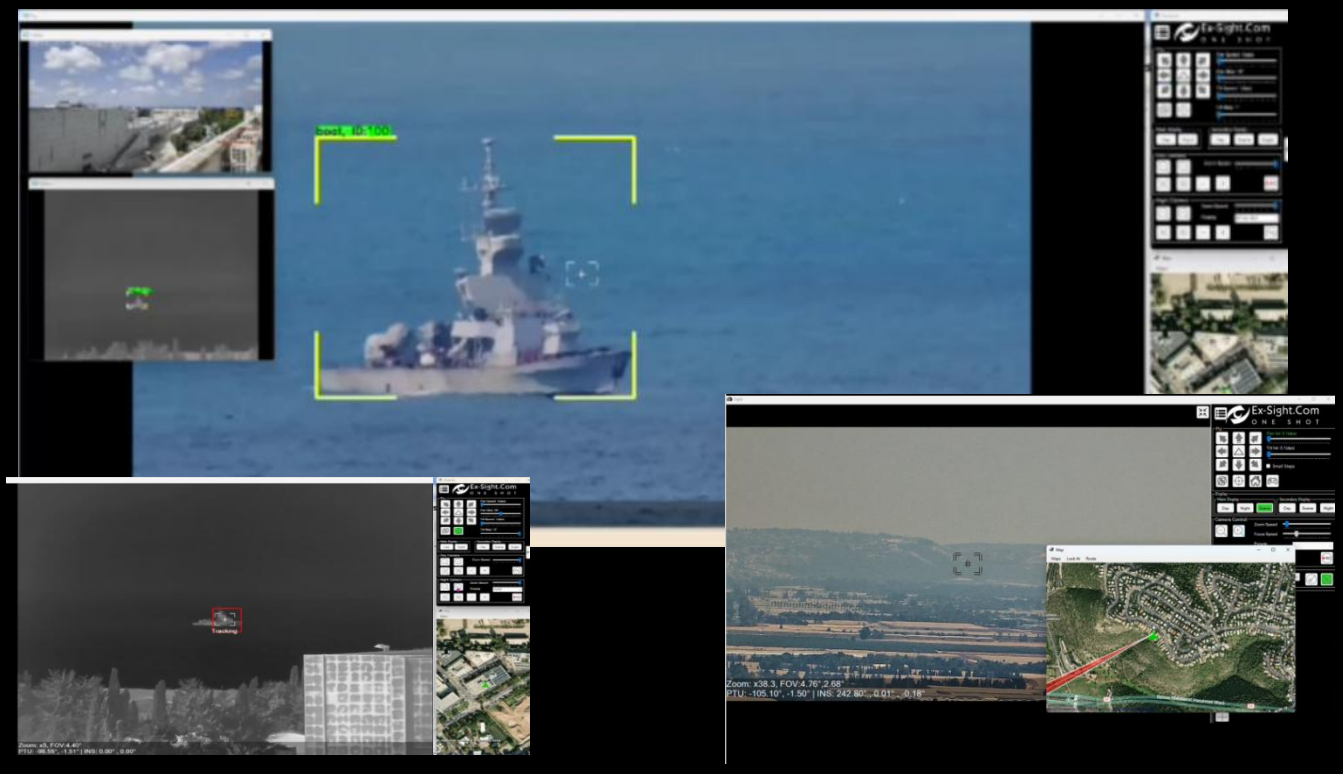

- Advanced Multi-Sensor Electro-Optic Software Platform
- Day & Night Electro-Optic Management with Automatic Target Recognition (ATR)
- Enhanced Digital Video Tracking, classification, and detection
- Precision PTZ, Day/Night, and LRF Control
- Geo-Positioning with integrated route-tracking capabilities
- INS GPS TRUE NORTH Gyro Stabilization
- Electronic Image Stabilization (EIS)
- Comprehensive ATR: detection, tracking, classification
- Automated Fire Detection
- Integrated Tracking, Simulation, and Training suite
- Advanced Mapping and Field of View (FOV) zone visualization
- Seamless Recording and system logging
- External Integration with drones, radars, and third-party systems
- C# SDK and API for custom development

Why DEEPSIGHT?

- **Unified Control:** Centralized multi-sensor electro-optic software platform.
- **Smart Surveillance:** Day/night management powered by Automatic Target Recognition.
- **Intelligent Tracking:** Enhanced digital video classification and detection.
- **Full Hardware Mastery:** Complete command over PTZ, day/night sensors, and laser rangefinders.
- **Smart Navigation:** Real-time geo-positioning paired with pre-loaded route tracking.
- **Rock-Solid Stability:** Dual INS/GPS True North gyro and electronic image stabilization.
- **Threat Detection:** Built-in video analytics and automated fire alerts.
- **Ready to Train:** All-in-one tracker, simulator, and operator training suite.
- **Situational Awareness:** Dynamic mapping and Field of View zone visibility.
- **Complete Auditing:** Continuous recording and system logging.
- **Unmatched Ecosystem:** Easy integration with radars, drones, and external assets.
- **Developer Friendly:** C# SDK/API for rapid customization.

TOUGH

DUAL SENSOR MICRO GIMBAL



All-In-One Electro-Optic payload with minimum footprint, maximum intelligence, engineered for Networked operations

TOUGH

DUAL SENSOR MICRO GIMBAL



CHASSIS	
MATERIALS	Internal**:** Aluminum, Cover: PETG-CF/ABS
DIMENSIONS	116 x 68 mm, 370 gr
LWIR SENSOR	
DETECTOR	Uncooled VOx FPA
RESOLUTION	640 × 512 pixels
PIXEL PITCH	12 µm
FRAME RATE	50 fps
SPECTRAL RANGE	8 µm- 14 µm
FOCAL LENGTH OPTIONS	6.8 / 9.1 / 13 / 19 / 25 mm
DIGITAL ZOOM	x 8
FOV LWIR	**6.8 mm:** 58.9° × 44.2°; **9.1 mm:** 48.3° × 38.7°; **13 mm:** 33.9° × 27.1°; **19 mm:** 23.0° × 18.4°; **25 mm:** 17.3° × 14.0°;
DAY SENSOR	
SENSOR	2.3MP CMOS 1/2.6-inch
RESOLUTION	1920 x 1200 pixels (2.3MP) 30 fps
WDR	71.4db
SHUTTER	Global Shutter
LENS	4mm
FOV DAY	D:94° H:85° V:58°
AZIMUTH & ELEVATION	2 Axes Movement, max. ±180 deg
PRECISION	1 Deg
SPEED	Software Controlled (10 to 5000 DPS)
SOFTWARE INTERFACE	H.265/H.264 Ethernet/RTSP/ONVIF 1st stream: 1920×1080 / 1280×720 pixels 2nd stream: D1, VGA, 640×360 pixels
ELECTRIC INTERFACE	10 Pins DC3
POWER	12 VDC, Max 9W, Nominal 3.6W
IMU & Stabilization	9 Axis IMU

TOUGH

DUAL SENSOR MICRO GIMBAL

DIMENSIONS: (mm) 116 x 68
WEIGHT: 370 gr

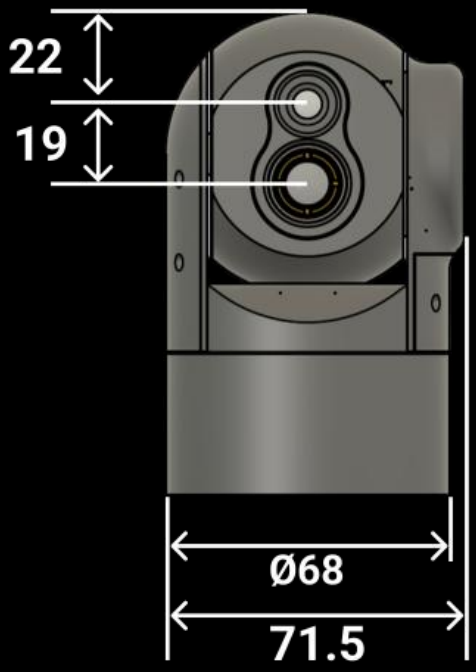

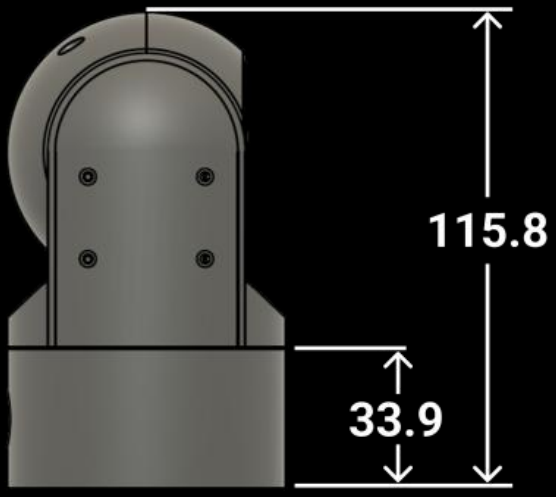

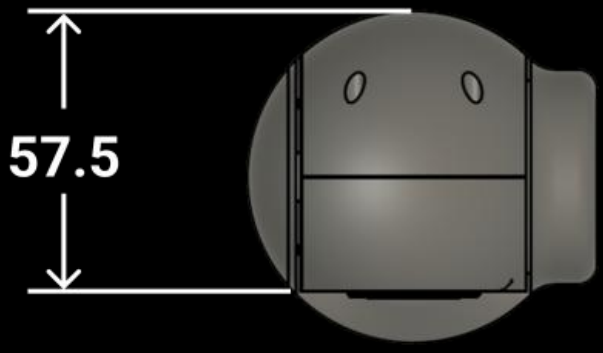

MICRO

FUSION

MINIATURE DUAL SENSOR ELECTRO OPTIC UNIT



MICRO FUSION

MINIATURE DUAL SENSOR ELECTRO OPTIC UNIT

CHASSIS	
MATERIALS	PETG-CF or Aluminum
LWIR SENSOR	
DETECTOR	Uncooled VOx FPA
RESOLUTION	640 × 512
PIXEL PITCH	12 µm
FRAME RATE	50 fps
SPECTRAL RANGE	8 µm- 14 µm
FOCAL LENGTH OPTIONS	6.8 / 9.1 / 13 / 19 / 25 mm
DIGITAL ZOOM	x 8
FOV LWIR	**6.8 mm:**58.9° × 44.2°; **9.1 mm:** 48.3° × 38.7°; **13 mm:** 33.9° × 27.1°; **19 mm:** 23.0° × 18.4°; **25 mm:** 17.3° × 14.0°;
DAY SENSOR	
SENSOR	2.3MP CMOS 1/2.6-inch (6.8mm)
RESOLUTION	1920x1200 (2.3MP) 30 fps
WDR	71.4 db
SHUTTER	Global Shutter
LENS	6.8 mm 90 Deg.
FOV DAY	D:94° H:85° V:58°
ETHERNET INTERFACE	H.265/H.264 Ethernet/RTSP/ONVIF 1st stream: 1920×1080 / 1280×720 pixels 2nd stream: D1, VGA, 640×360 pixels
ELECTRIC INTERFACE	D38999 / 24WB35PN (Cable mating connector 26WB35SN)
POWER	9-36 VDC, 3W Nominal Consumption (250mA@12VDC)
4G Modem Module (Optional)	

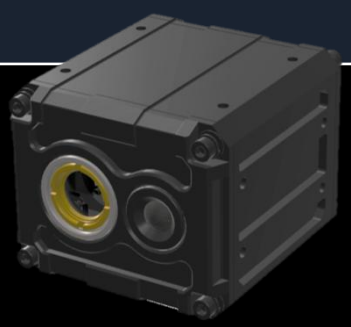

MICRO
FUSION

MINIATURE DUAL SENSOR ELECTRO OPTIC UNIT

DIMENSIONS: (mm) 53 x 44 x 57.4 Ø14 Ø18.7
WEIGHT: 100 gr (D38999 connector)

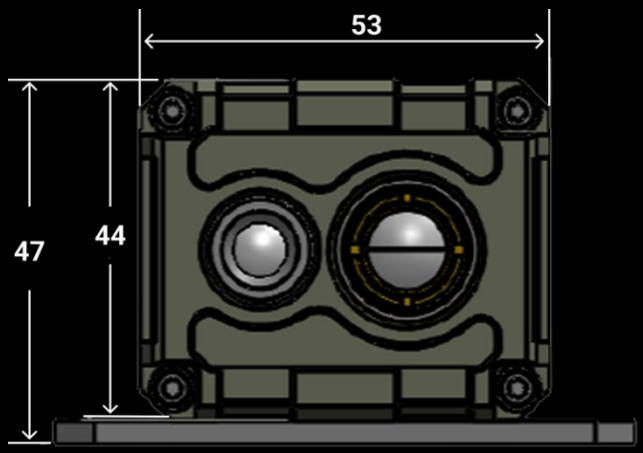

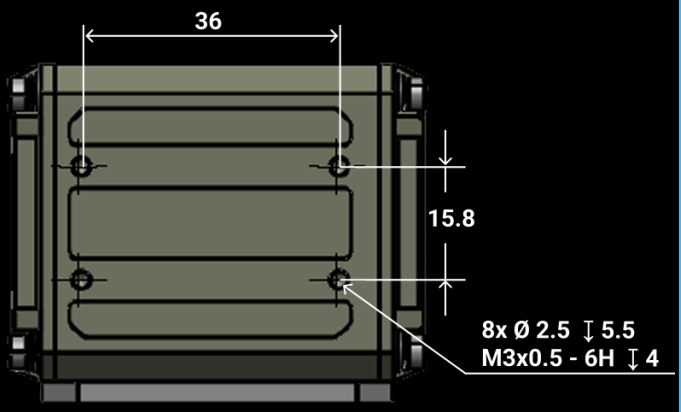

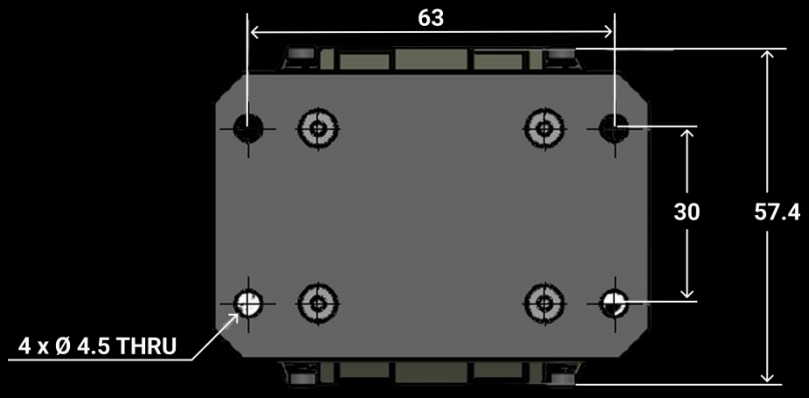

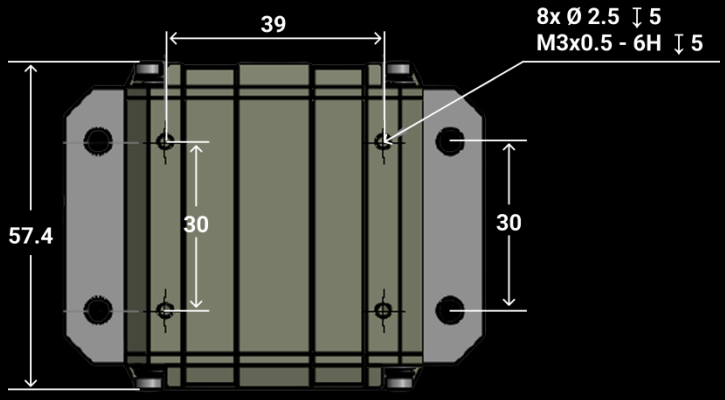

microFusion includes:
Day Sensor, LWIR Sensor, Bracket, Ethernet encoder, wired connectors.

MICRO

SITUATIONAL AWARENESS

MICRO 180/360 ELECTRO-OPTIC PANORAMIC STARING SYSTEM

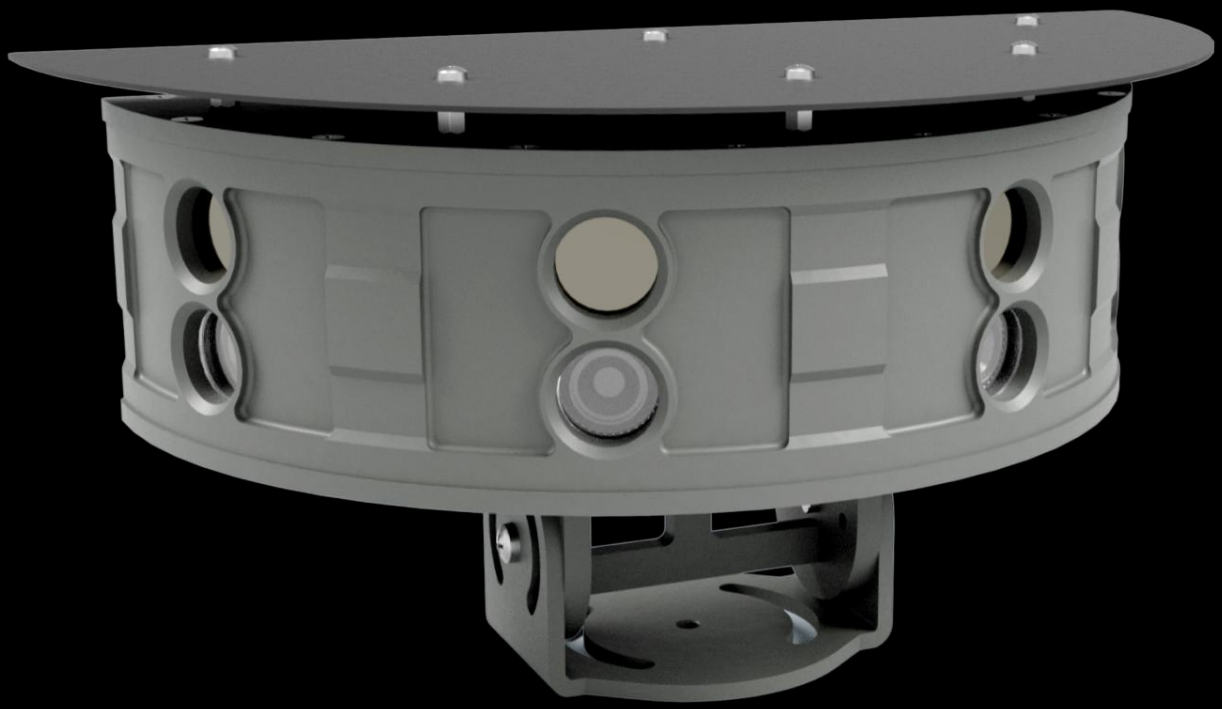

MICRO

SITUATIONAL AWARENESS

MICRO 180/360 ELECTRO-OPTIC PANORAMIC STARING SYSTEM

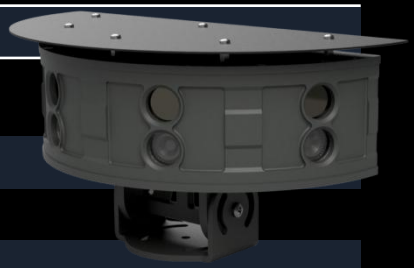

CHASSIS	
MATERIALS	Powder Painted Aluminum
LWIR SENSOR	
DETECTOR	4x Uncooled VOx FPA
RESOLUTION	640 × 512
PIXEL PITCH	12 µm
FRAME RATE	50 fps
SPECTRAL RANGE	8 µm- 14 µm
FOV	**9.1 mm:** 48.3° × 38.7°
DIGITAL ZOOM	x 8
LOW LIGHT DAY SENSOR	
SENSOR	4 x 4K Day Camera IMX678
RESOLUTION	3840x2160 (8MP) UHD 30fps
FOV	(H) 57.1° (V) 30.4° (D) 66.3°
SOFTWARE INTERFACE	H.265/H.264 Ethernet/RTSP/ONVIF
ELECTRIC INTERFACE	D38999/24WB35PN
POWER	2A@24VDC (12-40VDC)
INS GPS IMU	Optional

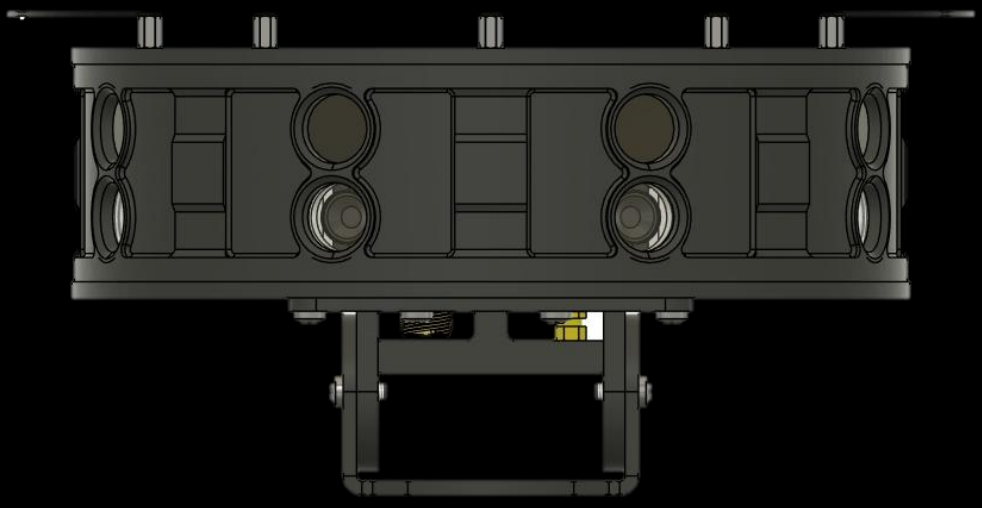

Ex-Sight.Com
ONE SHOT

MICRO

SITUATIONAL AWARENESS

MICRO 180/360 ELECTRO-OPTIC PANORAMIC STARING SYSTEM

DIMENSIONS: (mm) 180 x 176 x 312

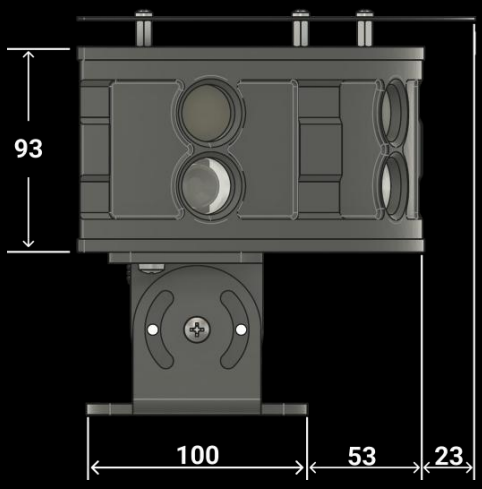

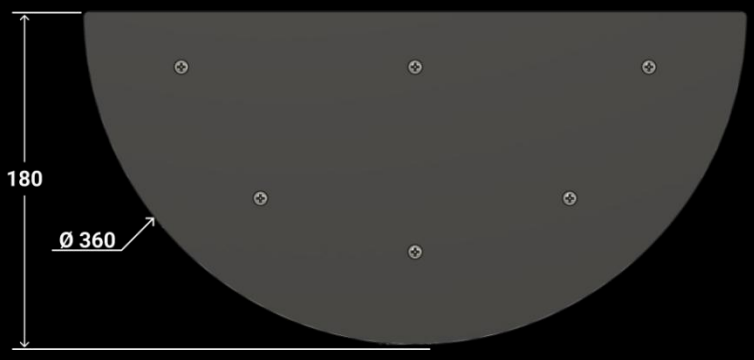

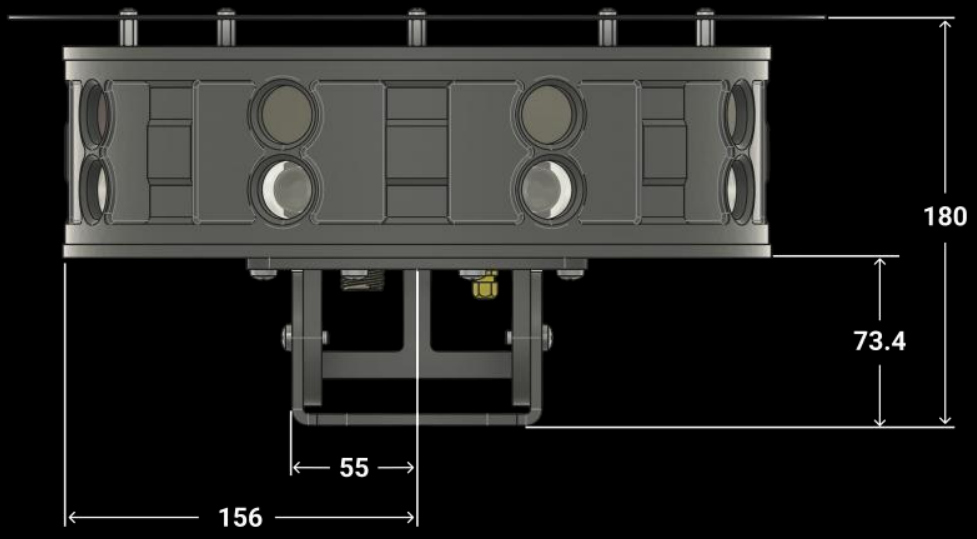

EX-SIGHT ADVANCED ELECTRO-OPTICS

SITUATIONAL AWARENESS

RUGGED ELECTRO-OPTIC PANORAMIC STARING SYSTEM FOR NAVAL AND GROUND APPLICATIONS



See First. Act First.

- 360°/180° 8MP 4K Day (VIS) & HD Night Continuous Coverage
- AI-assisted Detection & Tracking
- Modular Integration for Manned & Unmanned Platforms
- Rugged Design, Hermetic Sealed IP-67, Nitrogen Purged
- 1Gbps Ethernet Interface, RTSP Streaming, Daisy Chain
- 12-40VDC Power Input

SITUATIONAL AWARENESS

RUGGED 360/180 DAY & NIGHT ELECTRO-OPTIC PANORAMIC STARING SYSTEM





	SA360	SA180
LOW LIGHT VIS DAY	**SIX (6) x** 3840*2160/30fps **SONY Super Starlight** IMX678 8.0MP 4K 30 fps SAPPHIRE Window	**THREE (3) x** 3840*2160/30fps **SONY Super Starlight** IMX678 8.0MP 4K 30 fps SAPPHIRE Window
DAY WINDOW	SAPPHIRE	
FOV DAY	**SIX (6)** FOV (H) 93.1° (V) 49.6° (D) 110.8° Or FOV (H) 57.1° (V) 30.4° (D)66.3°	**THREE (3)** FOV (H) 93.1° (V) 49.6° (D) 110.8° Or FOV (H) 57.1° (V) 30.4° (D) 66.3°
NIGHT LWIR	**SIX (6)** 1280 x 1024 or 640 x 512 12µm 30 fps GE Window AR/DLC	**THREE (3)** 1280 x 1024 or 640 x 512 12µm 30 fps GE Window AR/DLC
NIGHT WINDOW	GE Window AR/DLC	
FOV NIGHT LWIR	360° Deg. (H) 6 x 70° **FOV (H) 420° (V) 46°**	180° Deg. (H) 3 x 70° **FOV (H) 210° (V) 46°**
DETECTION (640x512) (1280x1024)	**NATO/HUMAN** 370 m / 167 m 830 m / 375 m	**NATO/HUMAN** 370 m / 167 m 830 m / 375 m
POWER	2A@24VDC (12-40VDC)	1A@24VDC (12-40VDC)
DIMENSIONS (mm)	470x470x185 mm	483x270x237 mm
ETHERNET	Embedded Industrial Gigabit Ethernet Switch	
PNL CONNECTOR	Hermetic Stainless Steel D38999/23YD35PN	
CABLE CONNECTOR	Hermetic Stainless Steel D38999/26KD35SN	
WEIGHT (Kg)	30 Kg	16 Kg
CHASSIS	RUGGED CNC Structure, Aluminum Chassis, ANTI SALT BLACK POWDER PAINT	
IP RATE	Sealed, IP67 Nitrogen Purged	

SITUATIONAL AWARENESS

FLAT VS. COMPACT DESIGN OPTIONS

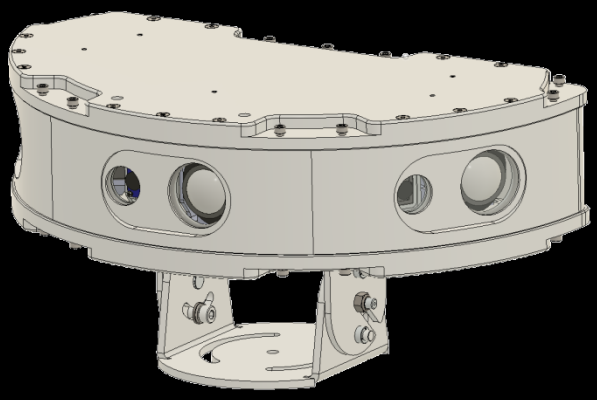



SA180 - Horizontal
Flat Horizontal, Side by Side
483 x 270 x 237 mm

SA180V - Vertical
Compact Vertical Aligned
357 x 197 x 253 mm

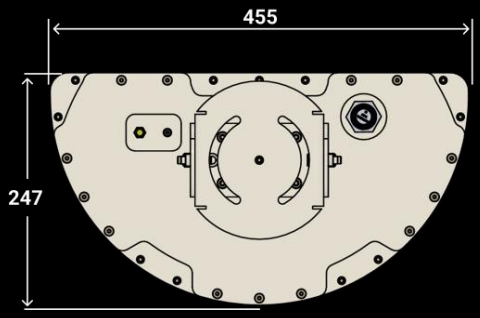

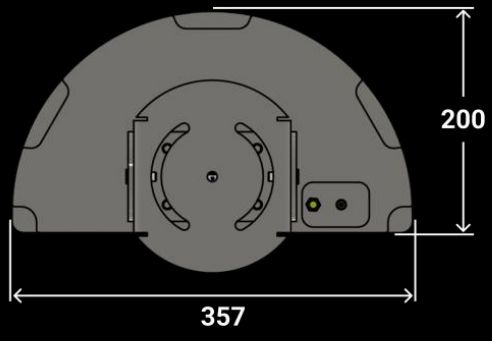

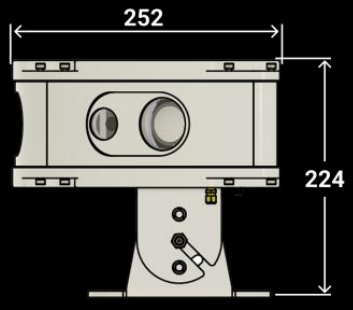

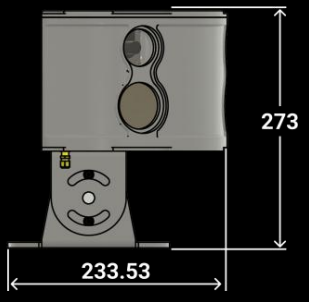

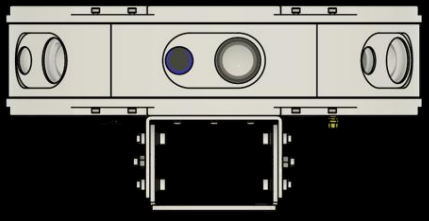

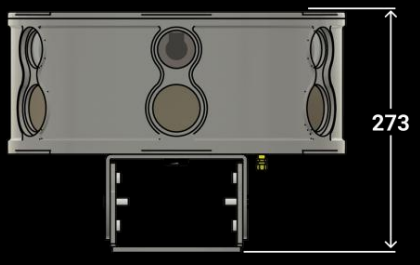

SITUATIONAL AWARENESS

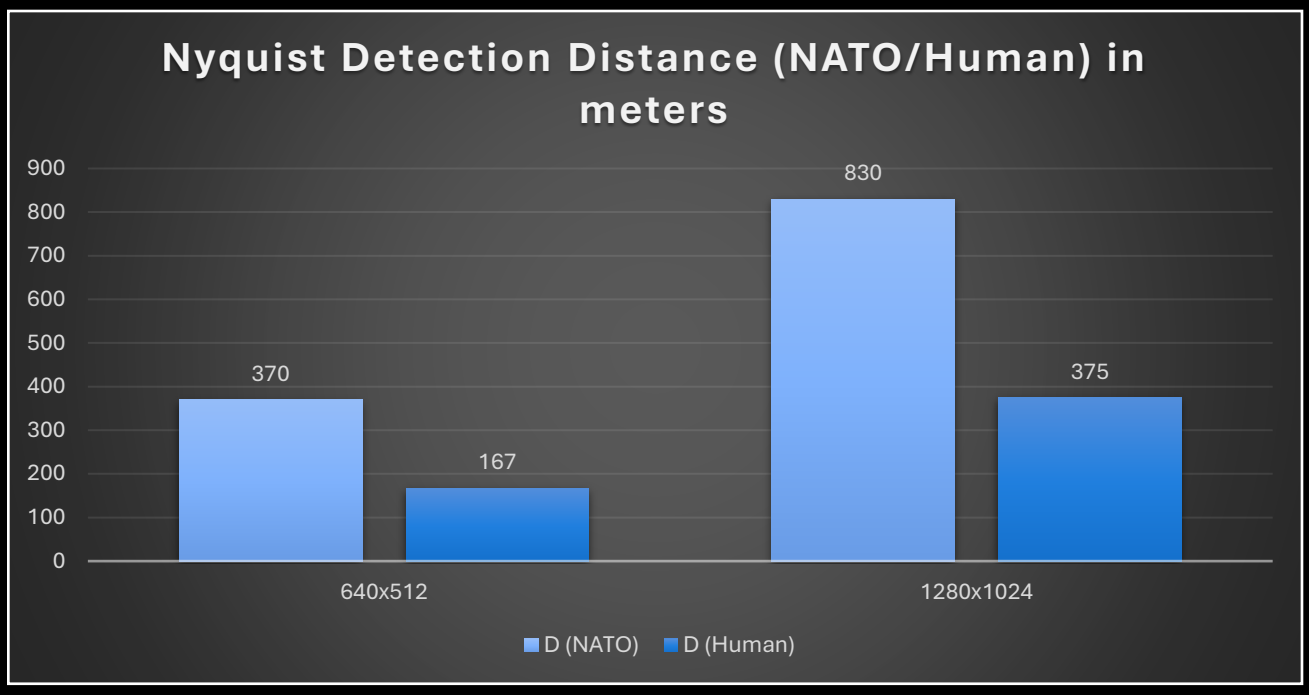

CABLE CONNECTOR PIN LAYOUT

D38999/26KD35SN Stainless Steel Hermetic Connector

PIN	DESCRIPTION
1	Main ETH 1 (White Orange)
2	Main ETH 2 (Orange)
3	Main ETH 3 (White Green)
4	Main ETH 4 (Blue)
5	Main ETH 5 (White Blue)
6	Main ETH 6 (Green)
7	Main ETH 7 (White Brown)
8	Main ETH 8 (Brown)
9	NC
10	NC
11	12VDC
12	GND

PIN	DESCRIPTION
13	12VDC
14	GND
15	Backup ETH 1 (White Orange)
16	Backup ETH 2 (Orange)
17	Backup ETH 3 (White Green)
18	Backup ETH 4 (Blue)
19	Backup ETH 5 (White Blue)
20	Backup ETH 6 (Green)
21	Backup ETH 7 (White Brown)
22	Backup ETH 8 (Brown)
23-37	NC

EX-SIGHT ADVANCED ELECTRO-OPTICS

AVIGAIL360

360 DOME SITUATIONAL AWARENESS UAS DETECTOR

AVIGAIL is a standalone 42 sensors drone detection system. AVIGAIL integrates an array of 21 Low Light Day Visual sensors and 21 Uncooled LWIR 640x512 Night detector sensors providing 360 (AZ) x 180 (El) Deg Dome detection. The system is connected via Fiber optic or Ethernet Giga connection into an Array of NPU processors packaged in one single Chassis named AIxNPU4.

The Dome system constantly Monitors, Detects and Tracks 360 (Az) x 180 (El) deg and looking for drones.
The detectors array (42 sensors) is connected to a fully automated computerized Neural processing unit which detects, tracks and position the threats in space.

AVIGAIL communicates with and cues external tracking systems such as DEEPSIGHT or other counter drone systems in order to follow and eliminate the threats.

See First. Act First.

- 360 (H) x 180 (V) deg Staring Detection System
- Up to 42 Day/Night sensors for Continuous Coverage
- ATR – Automated AI-assisted Detection & Tracking, made for counter drones
- Modular Integration for Manned & Unmanned Platforms
- Optional Fiber optic Ethernet interface for high transfer rates
- Large area coverage
- External Stabilized Power Supply

AVIGAIL360

360 DOME SITUATIONAL AWARENESS DRONE DETECTOR

MODEL	AVIGAIL
SENSORS	AVIGAIL-4K: 21 x Day 1920 x 1200 pixels 2.3MP CMOS 1/2.6 inch (6.8 mm) And / Or AVIGAIL-640: 21 x LWIR 640 x 512 pixels 12-micron H.265
SYSTEM COMPONENTS	IP66 Light Weight Case Rj45 1GB / Fiber Optic Ethernet Connector Embedded switch AI Hardware Software included
FOV	**360 Dome: 21 cams x (57.1°x 30.4°)**
POWER	9-75 VDC, 72W

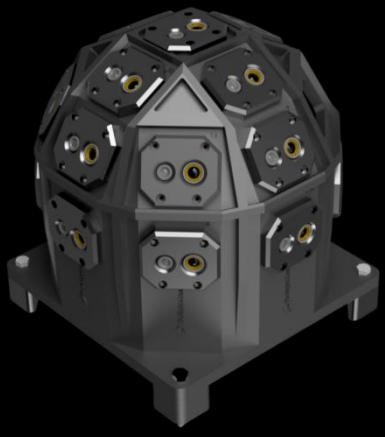



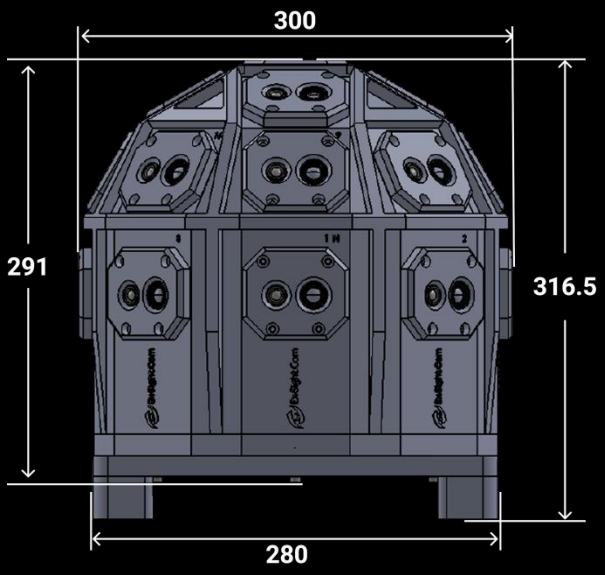

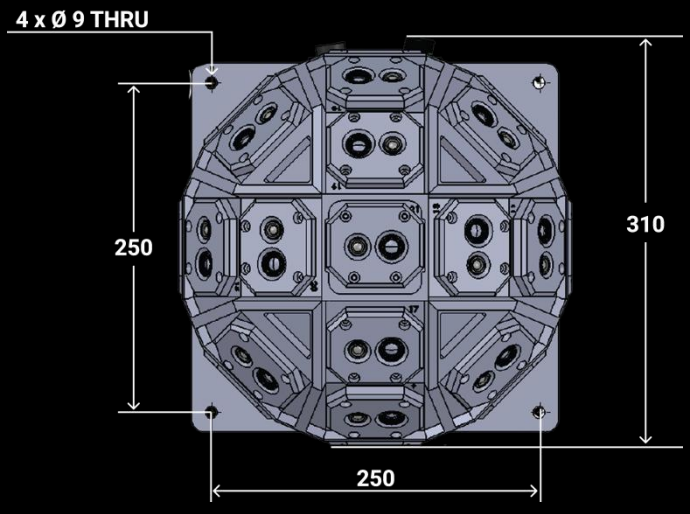

AVIGAIL360

APPLICATIONS

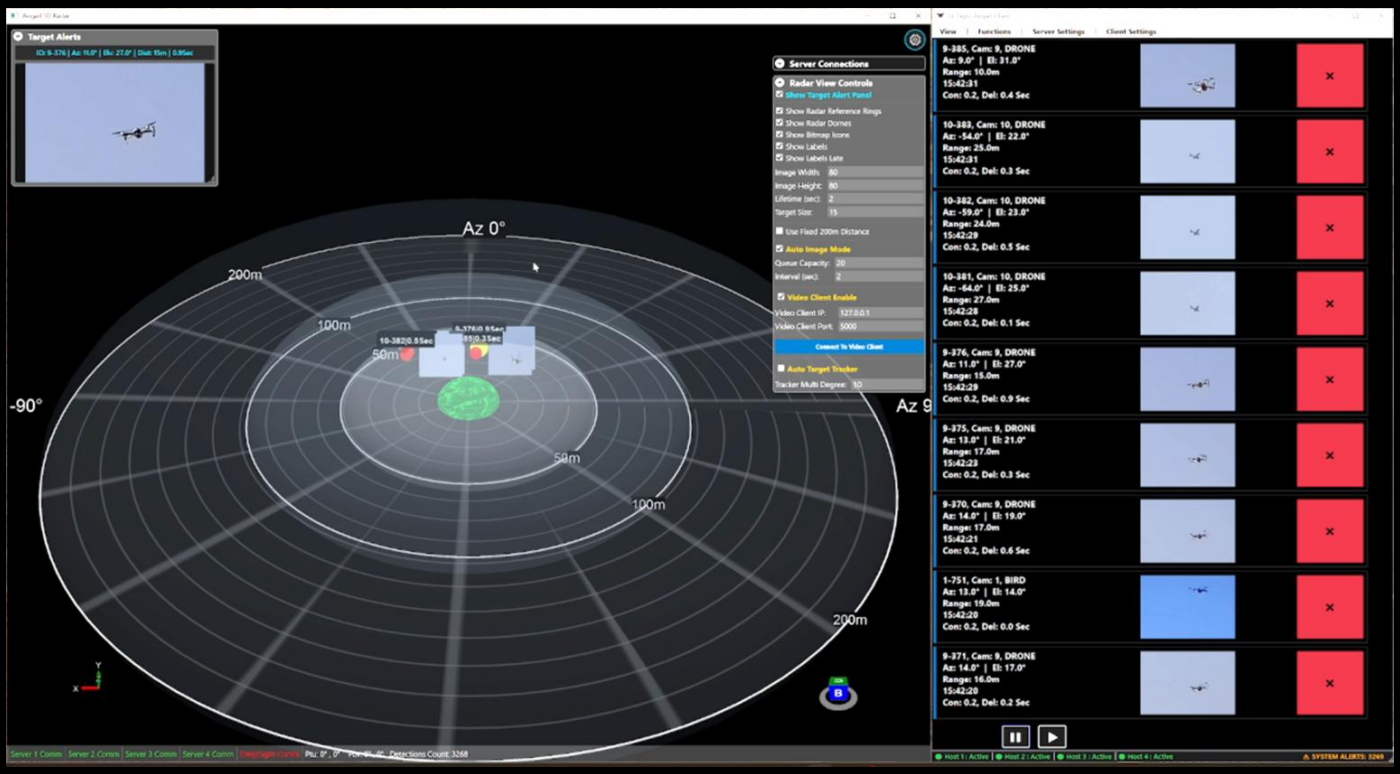

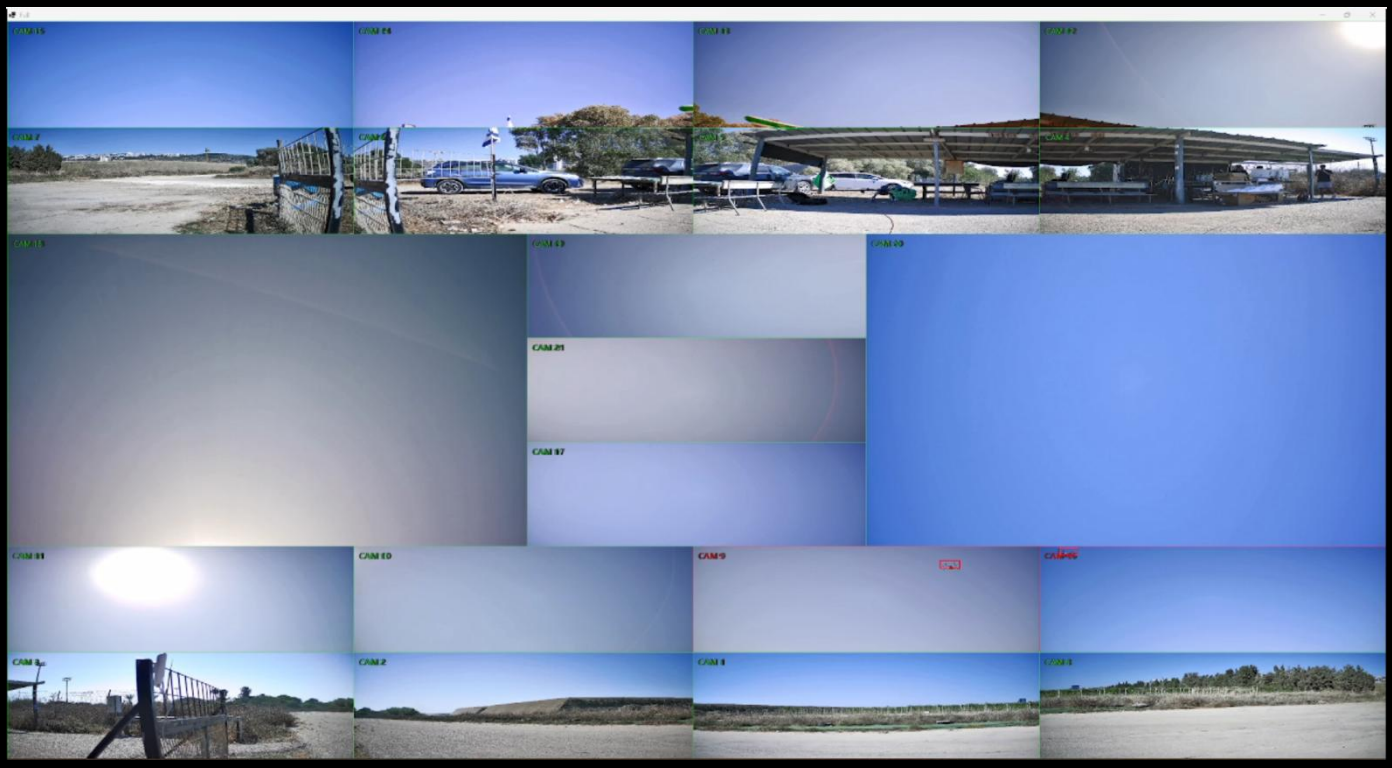

AVIGAIL TOPVIEW

WIDE-AREA SURVEILLANCE & SITUATIONAL AWARENESS PAYLOAD



See First. Act First.

- 18 x 4K Day (VIS) & Night LWIR Continuous Coverage, Wide-Area Surveillance
- AI-assisted Detection & Tracking
- Integrated investigation PTZ
- Modular integration for manned and unmanned platforms.
- Fiber optic Ethernet interface for high transfer rates
- Large terrain coverage 750m x 750m @ 100m alt

AVIGAIL TOPVIEW

WIDE-AREA SURVEILLANCE & SITUATIONAL AWARENESS PAYLOAD

LOW LIGHT SENSOR

MODEL	AVIGAIL
SENSOR	18 x Day 4K 3840 x 2160 pixels IMX678 H265 OR 18 x LWIR 640 x 512 pixels 12 micron
OPTIONAL	2 x TOUGH Dual sensor micro gimbal.
SYSTEM COMPONENTS	IP66 Light Weight Case Fiber Optic Ethernet Connector Embedded switch Software included
FOV	**18 cams x (57.1°x 30.4°)**
POWER	9-75 VDC, 72W

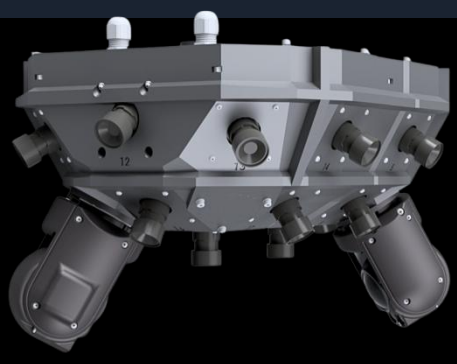

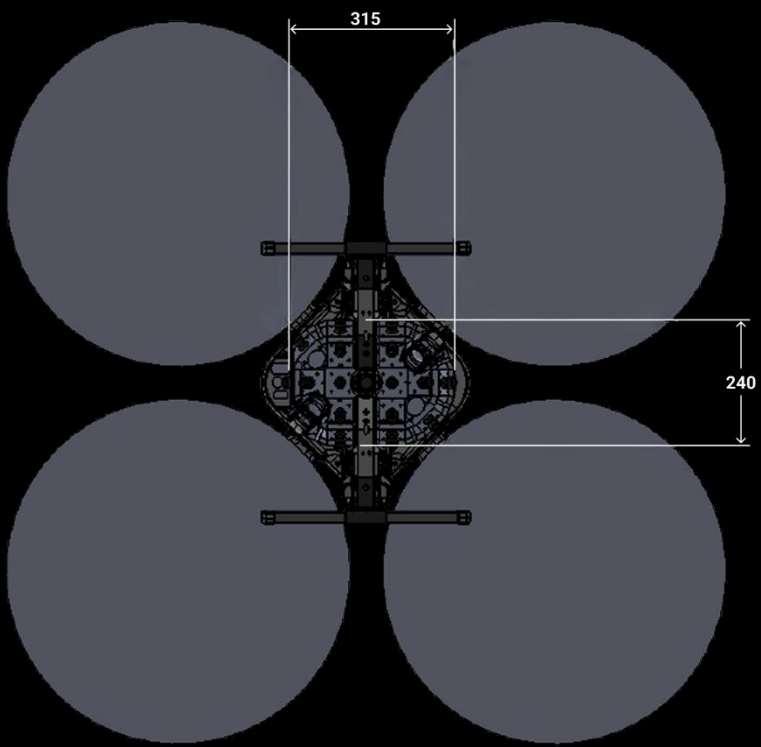

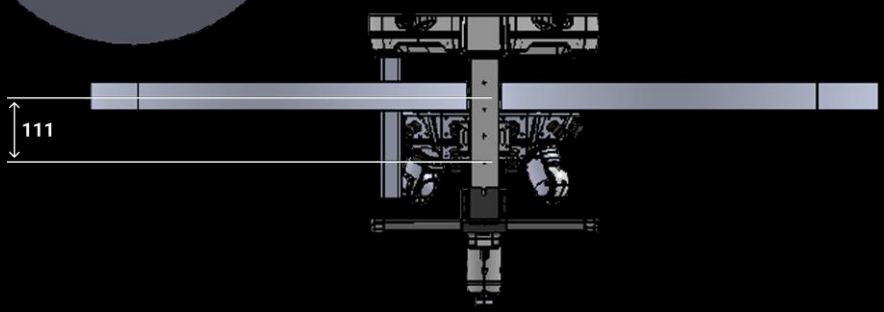

DEEPSIGHT

INTEGRATED ELECTRO-OPTIC DEVELOPMENT PLATFORM



DETECT. IDENTIFY. DOMINATE.

SightDESK.	complete software solution, control center application
Live Streaming.	Fusion | Day | Night | Scene Real-Time Streams
Telemetry Data.	Detectors, Trackers, LRF, Pan Tilt Data, INS
Geo-Position.	INS, GPS, Compass, IMU, GYRO, Mapping
Fire-Detector.	Day and Night fire risk detection
Storage.	Video/Audio Storage Manager, Logger
Alerts.	Alert manager. IO connectivity and LAN/WAN alerts
ATR.	Target Detection / Tracking / PTZ Tracker
Stabilization.	EIS (3 Axis Image) and Gyro Stabilization
Panorama.	Panorama Generator. Live Field of View control, Presets
Customized GUI.	Win forms or Web
Code.	Ready to run Code examples and Open Source .Net software interface
Discovery Tool.	Open-source discovery tool with your brand
Secured VLAN.	with Single IP Address to the device

EX-SIGHT ADVANCED ELECTRO-OPTICS

DEEPSIGHT

INTEGRATED ELECTRO-OPTIC DEVELOPMENT PLATFORM

SIGHT IS QUALIFIED:
MIL-STD-810G FOR THE FOLLOWING PROCEDURES:

High Temp. - Method 501.6, Procedure I Storage high temp 168H
Low Temp. - Method 502.6, Procedure I Storage low temp 24H
High Temp. - Method 501.6, Procedure II High-temperature operation 24H
Low Temp. - Method 502.6, Procedure II Low-temperature operation 24H
Temperature Shock -Method 503.6,63/-33, 1 cycle
Vibration - method 514.7, transportation highway,1H each axis total 3H
Vibration - method 528.1, operational 15 sec each frequency, endurance 2H
Shock - method 516.7, Procedure I, 40g/11 ms
Dust -method 510.6, procedure I
Salt Fog, total 96h
SAND -Method 510.6, procedure II
Humidity - Method 507.6, Procedure II, 240H
Sealing test towards IEC60529 IP67 code
Solar radiation - Method 505.4 procedure I – 72H
Rain - Method 506.4, Procedure II, 15 minutes
Fluids contamination - Method 504.3

MIL STD 461F EMI RFI
CE101, CE102, CS101, CS114, CS116, RE101
RE102, RS101, RS103 (2Mhz-18Ghz;50V/m).



Tested by:

ITL ISRAEL TESTING LABORATORIES
Global Certifications You Can Trust

Ex-Sight.Com
ONE SHOT

DEEPSIGHT

INTEGRATED ELECTRO-OPTIC DEVELOPMENT PLATFORM

MODEL	MWIR 15-300	LWIR 25-150	LWIR 20-100	LWIR HD 25-75
LOW LIGHT DAY SENSOR	3.0MP Global Shutter Zoom Block Optical x 30 Digital x 16 Resolution 2048 x 1536 @ 30fps Focal Length 5,5 mm-165 mm FOV 46,5° - 2,2° Or 3.7MP SONY IMX675 Zoom Block Optical x 40 Digital x 32 Resolution 2560 x 1440 @ 30fps Focal Length 4,25 mm-170 mm FOV 73,8° - 2,16°			
DAY WINDOW	SAPPHIRE			
NIGHT SENSOR	COOLED MWIR 640x512 x 20 Zoom 15-300 mm F4.0 **FOV 1,83° to 35,5°**	LWIR 640x512 x6 Zoom 25-150mm **FOV 17,5° to 2,93°**	LWIR 640x512 x5 Zoom 20-100mm **FOV 22,5° to 4,4°**	LWIR 1280x1024 x3 Zoom 25-75mm **FOV 11,5°to 35,9°**
NIGHT WINDOW	GE/SILICON windows, Size: ϕ92.6x5mm, AR/DLC			
MOUNTING	Horizontal / Vertical Installation			
	THERMAL DRI – Detection, Recognition, Identification			
DETECTION (m) Human/NATO target	8,660/14,500	4,300/9,583	2,886/6,388	2,165/4,791
RECOGNITION (m) Human/NATO target	4,330/9,583	2,165/4,791	1,443/3,194	1,082/2,395
IDENTIFICATION (m) Human/NATO target	3,247/7,187	1,623/3,593	1,082/2,395	812/1,797

LRF Laser Range Finder	•8 Km NATO Target, Precision 0.01 – 0.5 m, Beam divergence 0.6 mrad, Class 1 eye-safe laser (IEC 60825-1).
NPU	CPU Intel® Core™ Ultra Processors ,RAM 64GB, SSD 1TB ,INTEL® ARC™
POWER	12-40 VDC 120W Max. MIL.STD704, MIL.STD810G POWER STABILIZER
DIMENSIONS (mm)	190 x 300 x 284 mm
INTERFACE	ETHERNET INTERFACE
CONNECTOR	Hermetic Stainless Steel D38999/23YC35PN
WEIGHT (Kg)	9 Kg
IP RATE	Sealed IP67 Nitrogen Purged

*DRI Calculation according to Johnson Criteria (Lines 3/6/8 D/R/I)

Ex-Sight.Com
ONE SHOT

DEEPSIGHT

INTEGRATED ELECTRO-OPTIC DEVELOPMENT PLATFORM

MODEL	MWIR HD 15-300	SWIR HD 7.1-200	SWIR HD 17-510	LWIR HD 25-225
LOW LIGHT DAY SENSOR	3.0MP Global Shutter Zoom Block Optical x30 Digital x16 Resolution 2048x1536 @ 30fps Focal Length 5,5 mm-165 mm FOV 46,5° - 2,2° Or 3.7MP SONY IMX675 Zoom Block Optical x40 Digital x32 Resolution 2560x1440 @ 30fps Focal Length 4,25 mm-170 mm FOV 73,8° - 2,16°			
DAY WINDOW	SAPPHIRE GLASS			
NIGHT SENSOR	COOLED HD MWIR x20 Zoom 1280x1024 15-300 mm F4.0 **FOV 35,5°to 1,83°**	SWIR 1280x1024 x28 Zoom 7.1-200 mm **FOV48,5° to 1,83°**	SWIR 1280x1024 x30 Zoom 17-510 mm **FOV 21,32° to 0,72°**	LWIR 1280x1024 x9 Zoom 25-225 mm **FOV 34,2° to 3,9°**
NIGHT WINDOW	GE/SILICON windows			
MOUNTING	Horizontal / Vertical Installation			
	THERMAL DRI – Detection, Recognition, Identification			
DETECTION (m) Human/NATO target	8,660/14,500	13,856/30,666	35,333/78,200	6,495/14,375
RECOGNITION (m) Human/NATO target	4,330/9,583	6,928/15,333	17,666/39,100	3,247/7,187
IDENTIFICATION (m) Human/NATO target	3,247/7,187	5,196/11,500	13,250/29,325	2,435/5,390
LRF Laser Range Finder	•8KM NATO Target, Precision 0.01 – 0.5 m, Beam divergence 0.6 mrad, Class 1 eye-safe laser (IEC 60825-1).			
NPU	CPU Intel® Core™ Ultra Processors ,RAM 64GB, SSD 1TB ,INTEL® ARC™			
POWER	12-40 VDC 120W Max. MIL.STD704, MIL.STD810G POWER STABILIZER			
DIMENSIONS(mm)	190 x 300 x 284 mm		275 x 367 x 360 mm	
INTERFACE	ETHERNET INTERFACE			
CONNECTOR	Hermetic Stainless Steel D38999/23YC35PN			
WEIGHT (Kg)	12 Kg	16 Kg	20 Kg	23 Kg
IP RATE	Sealed IP67 Nitrogen Purged			

*DRI Calculation according to Johnson Criteria (Lines 3/6/8 D/R/I)

Ex-Sight.Com
ONE SHOT

DEEPSIGHT

INTEGRATED ELECTRO-OPTIC DEVELOPMENT PLATFORM

MODEL	MWIR HD 50-1000	LWIR HD 30-300	LWIR HD 25-225 PRO	SWIR HD 17-510 PRO
LOW LIGHT DAY SENSOR	1/1.8" 5MP Pregius S Global Exposure CMOS, 2448 x 2048, 5MP 20 ~ 1200 mm ; 60 x Optical, 16 x Digital **FOV 19,0° to 0,32°**			
DAY WINDOW	SAPPHIRE GLASS			
NIGHT SENSOR	COOLED HD MWIR x20 Zoom 50-1000 mm F4.0 **FOV 14,6° to 0,7°**	LWIR 1280x1024 x10 Zoom 30-300 mm **FOV 28,7° to 2,9°**	LWIR 1280x1024 x9 Zoom 25-225 mm **FOV 34,2° to 3,9**	SWIR 1280x1024 x30 Zoom 17-510 mm **FOV 21,32° to 0,72**
NIGHT WINDOW	GE/SILICON windows			
MOUNTING	Horizontal Installation			
THERMAL DRI – Detection, Recognition, Identification				
DETECTION (m) Human/NATO target	34,000/76,000	8,660/19,166	6,495/14,375	35,333/78,200
RECOGNITION (m) Human/NATO target	17,320/38,333	4,330/9,583	3,247/7,187	17,666/39,100
IDENTIFICATION (m) Human/NATO target	12,990/28,750	3,247/7,187	2,435/5,390	13,250/29,325
LRF Laser Range Finder	8Km or 17.6Km NATO Precision 0.01 – 0.5 m, Beam divergence 0.6 mrad, Class 1 eye-safe laser (IEC 60825-1).			
NPU	CPU Intel® Core™ Ultra Processors ,RAM 64GB, SSD 1TB ,INTEL® ARC™			
POWER	12-40 VDC 120W Max. MIL.STD704, MIL.STD810G POWER STABILIZER			
DIMENSIONS (mm)	536 x 629 x 376			
INTERFACE	ETHERNET INTERFACE			
CONNECTOR	Hermetic Stainless Steel D38999/23YC35PN			
WEIGHT (Kg)	60 Kg	55 Kg	30 Kg	30 Kg
IP RATE	Sealed IP67 Nitrogen Purged			

*DRI Calculation according to Johnson Criteria (Lines 3/6/8 D/R/I)

DEEPSIGHT

INTEGRATED ELECTRO-OPTIC DEVELOPMENT PLATFORM



MODEL	OWL	OWL225	OWL1000	OMEGA Ω
MOUNTING TYPE	U Mount	U Mount	U Mount	Ω (OMEGA) TOP + Sides
TILT	Max ±90° Deg Max. Motor Torque (NM) 35/ 50/ 150			
PAN	Cont. 360° Deg Motor Torque (NM) 35/ 50/ 150			
TRUE NORTH INS GPS	DUAL ANTENNA GNSS-AIDED INERTIAL NAVIGATION*			
MAX.SPEED	20 RPM, up to 120°/sec			
MAX. PAYLOAD	50 Kg	50 Kg	70 Kg	80 Kg
DIMENSIONS (mm)	416 x 210 x 442	505 x 255 x 624	778 x 667 x 403	794 x 210 x 419
WEIGHT(Kg)	22 Kg	25 Kg	40 Kg	32 Kg
IP RATE	IP66			
POWER	24 - 48VDC			

DEEPSIGHT

INTEGRATED ELECTRO-OPTIC DEVELOPMENT PLATFORM

MODELS: MWIR15-300, LWIR 25-150, LWIR 20-100, LWIR HD 25-75, MWIR HD 15-300, SWIR HD 7.1-200, SWIR HD 17-510

DIMENSIONS: SIGHT (L x W x H, mm) 190 x 300 x 284

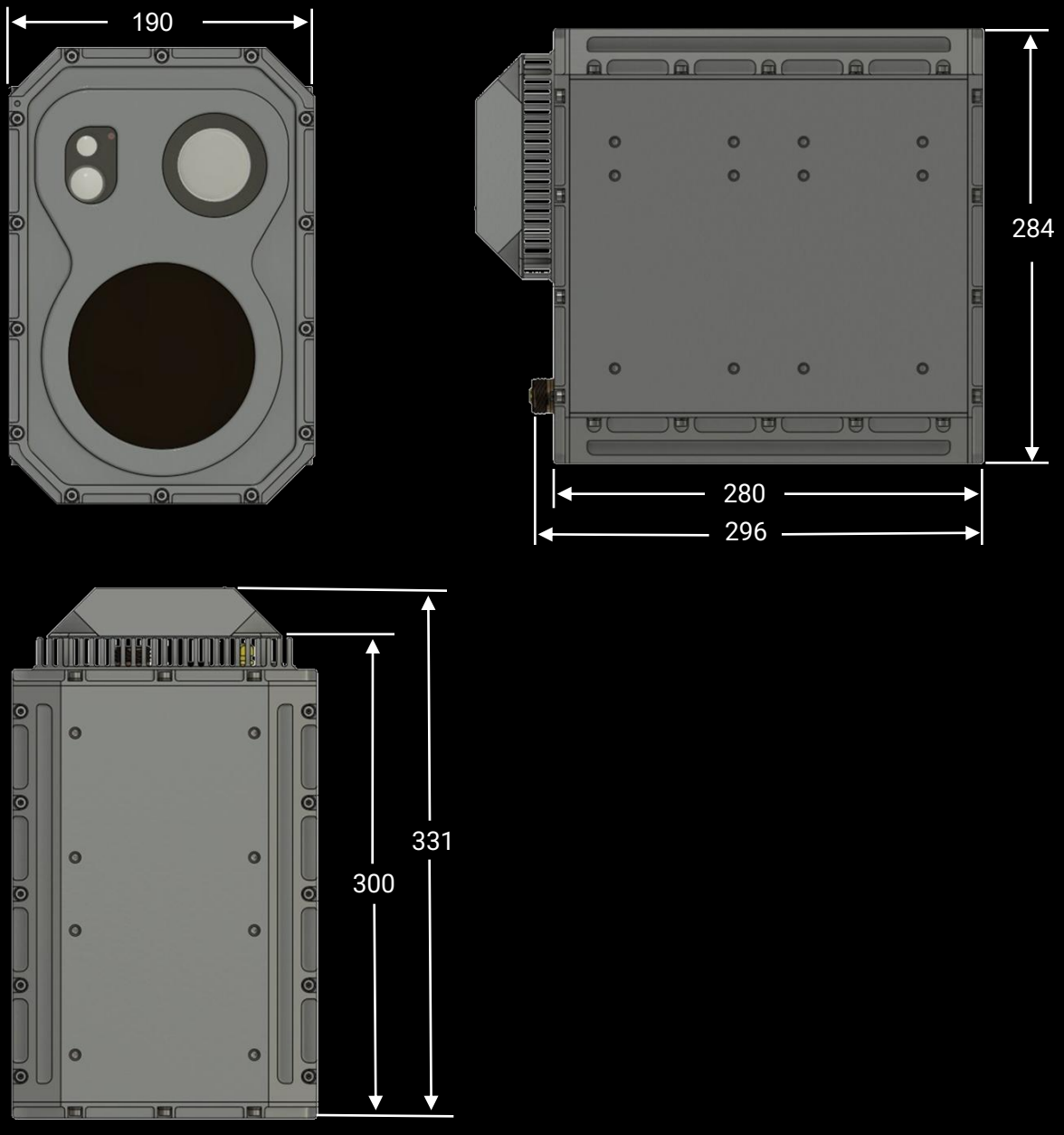

DEEPSIGHT

INTEGRATED ELECTRO-OPTIC DEVELOPMENT PLATFORM

MODELS: MWIR15-300, LWIR 25-150, LWIR 20-100, LWIR HD 25-75, MWIR HD 15-300, SWIR HD 7.1-200, SWIR HD 17-510

DIMENSIONS: PT OWL (L x W x H, mm) 406 x 300 x 581



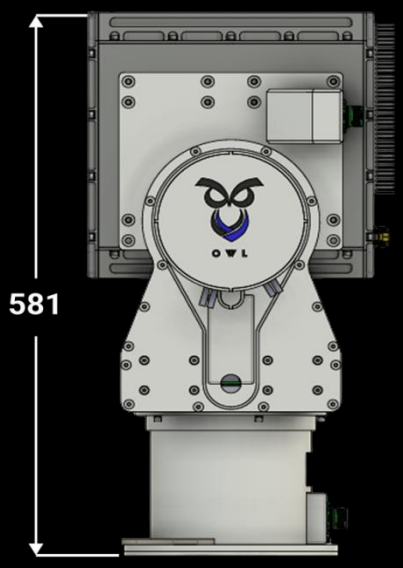

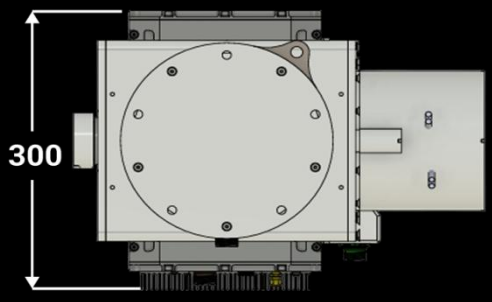

DEEPSIGHT

INTEGRATED ELECTRO-OPTIC DEVELOPMENT PLATFORM

MODELS: MWIR15-300 , LWIR 25-150, LWIR 20-100, LWIR HD 25-75, MWIR HD 15-300, SWIR HD 7.1-200, SWIR HD 17-510

DIMENSIONS: with PT OMEGA (L x W x H, mm) 402 x 300 x 608.5

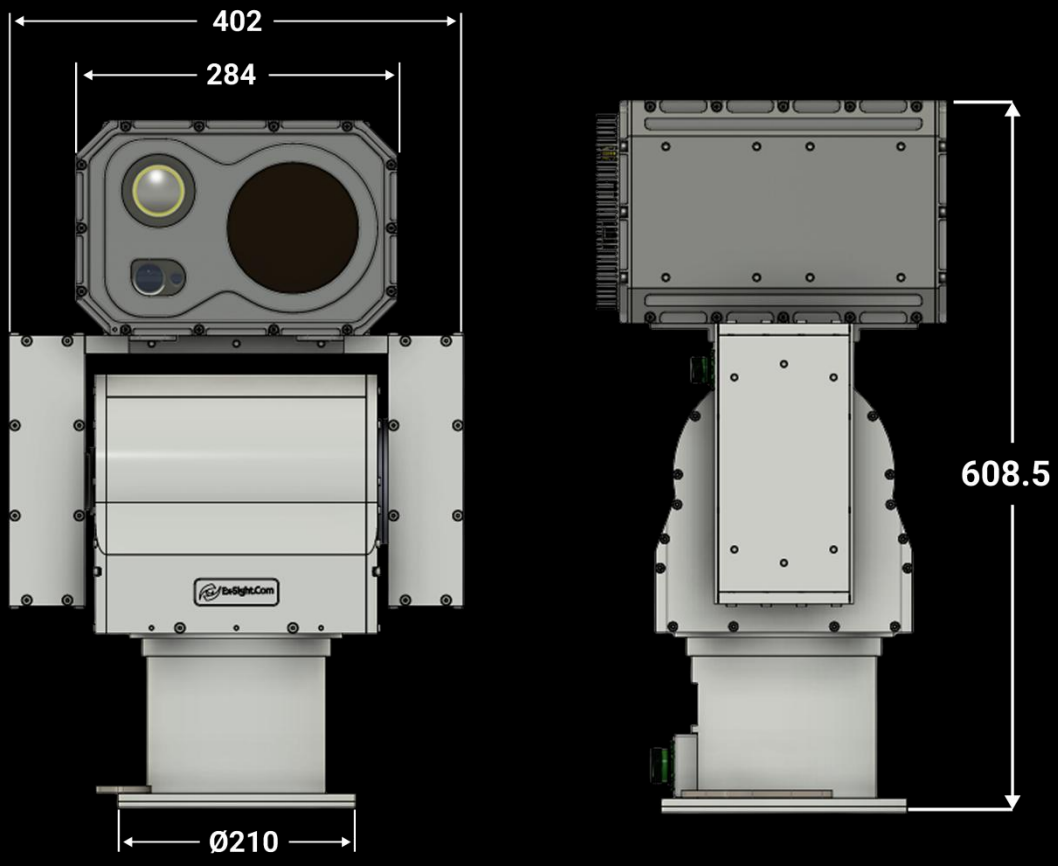

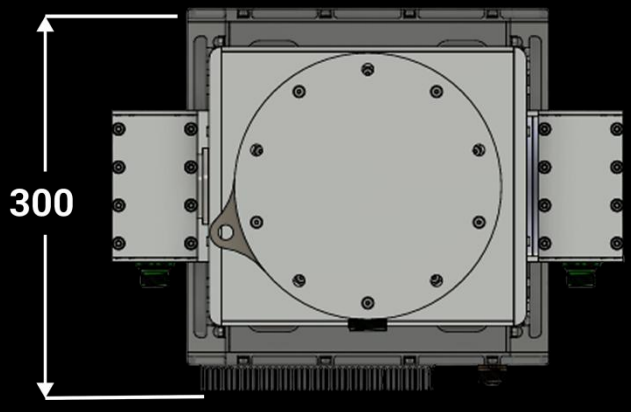

DEEPSIGHT

Integrated Electro-Optic Development Platform

MODELS: LWIR HD 25-225, SWIR HD 17-510

DIMENSIONS: SIGHT (L x W x H, mm) 275 x 367 x 360

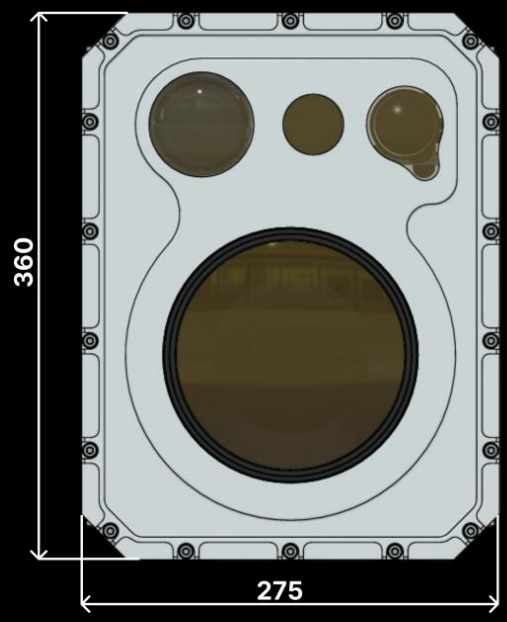

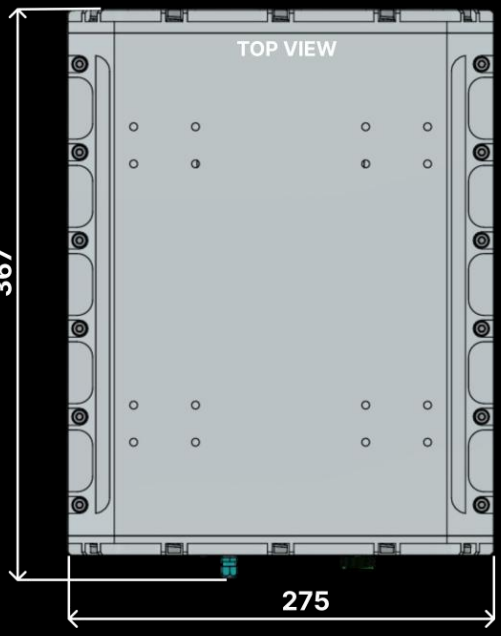

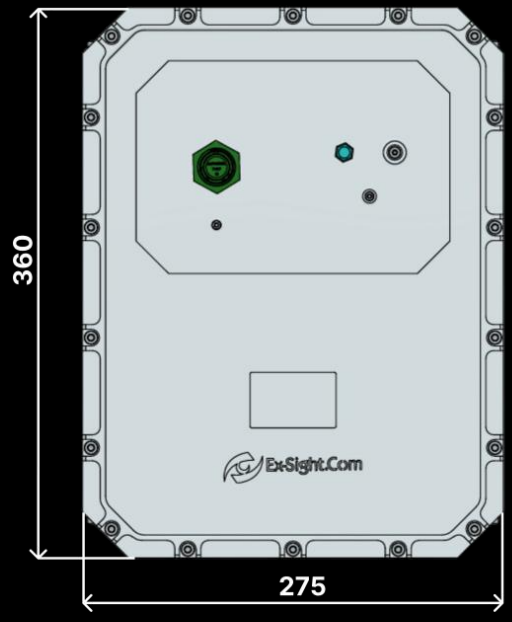

DEEPSIGHT

INTEGRATED ELECTRO-OPTIC DEVELOPMENT PLATFORM

MODELS: LWIR HD 25-225, SWIR HD 17-510

DIMENSIONS: with OWL225 (L x W x H, mm) 505 x 255 x 624

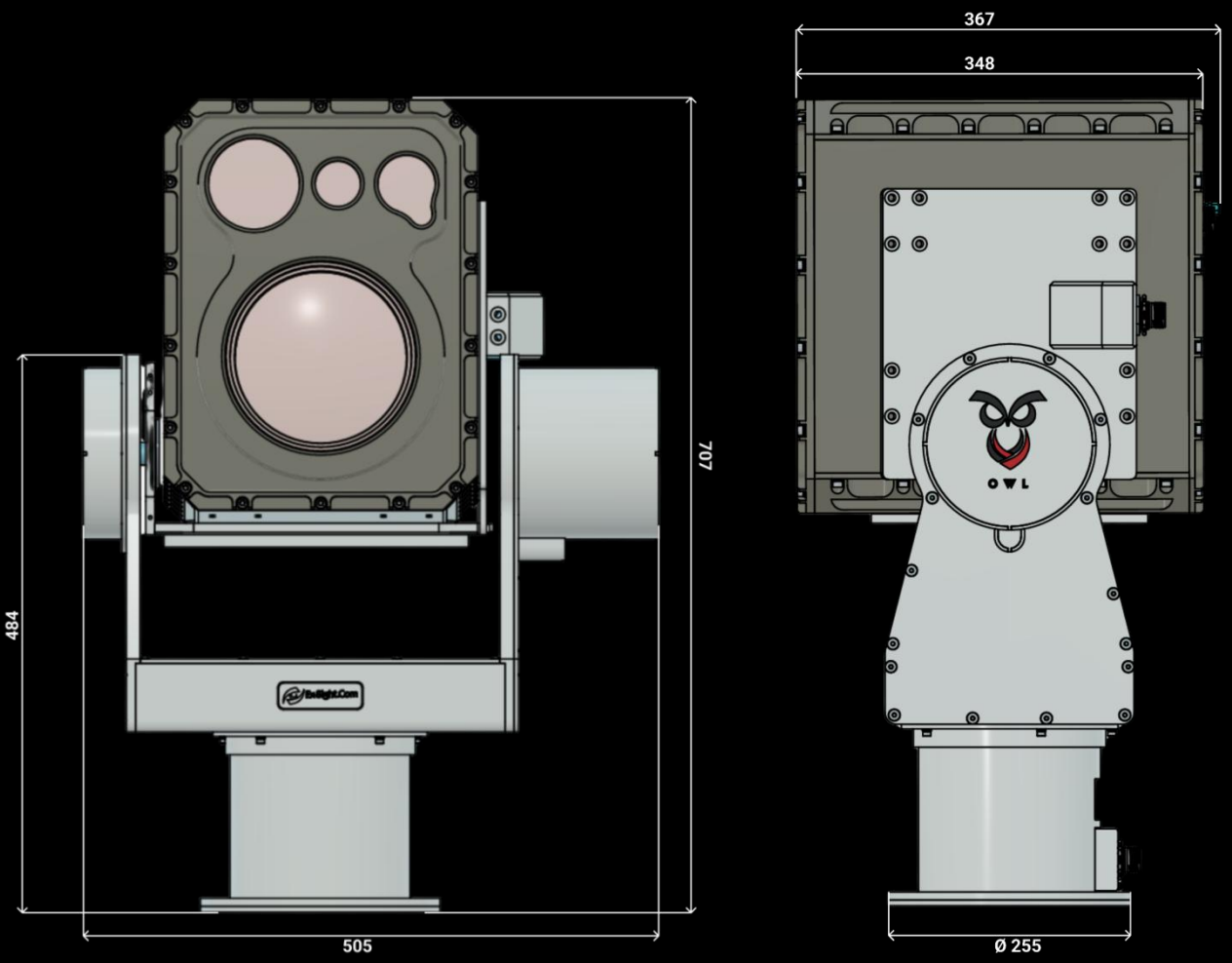

DEEPSIGHT

INTEGRATED ELECTRO-OPTIC DEVELOPMENT PLATFORM

MODELS: MWIR HD 50-1000, LWIR HD 30-300, LWIR HD 25-225 PRO, SWIR HD 17-510 PRO

DIMENSIONS: (L x W x H, mm) 536 x 629 x 376

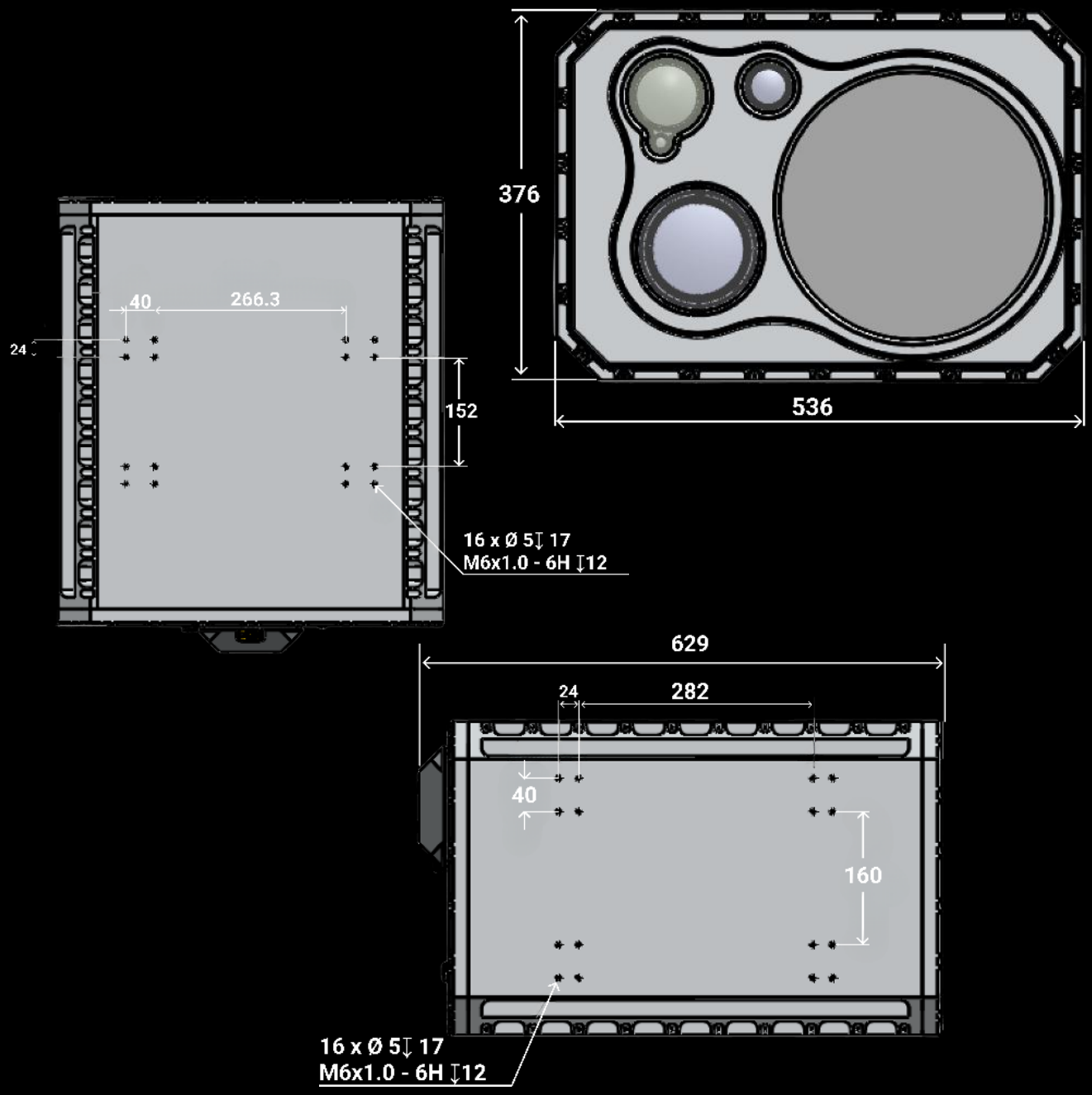

DEEPSIGHT

INTEGRATED ELECTRO-OPTIC DEVELOPMENT PLATFORM

MODELS: MWIR HD 50-1000, LWIR HD 30-300, LWIR HD 25-225 PRO, SWIR HD 17-510 PRO

DIMENSIONS: with OWL1000 PT (L x W x H, mm) 777 x 765 x 629

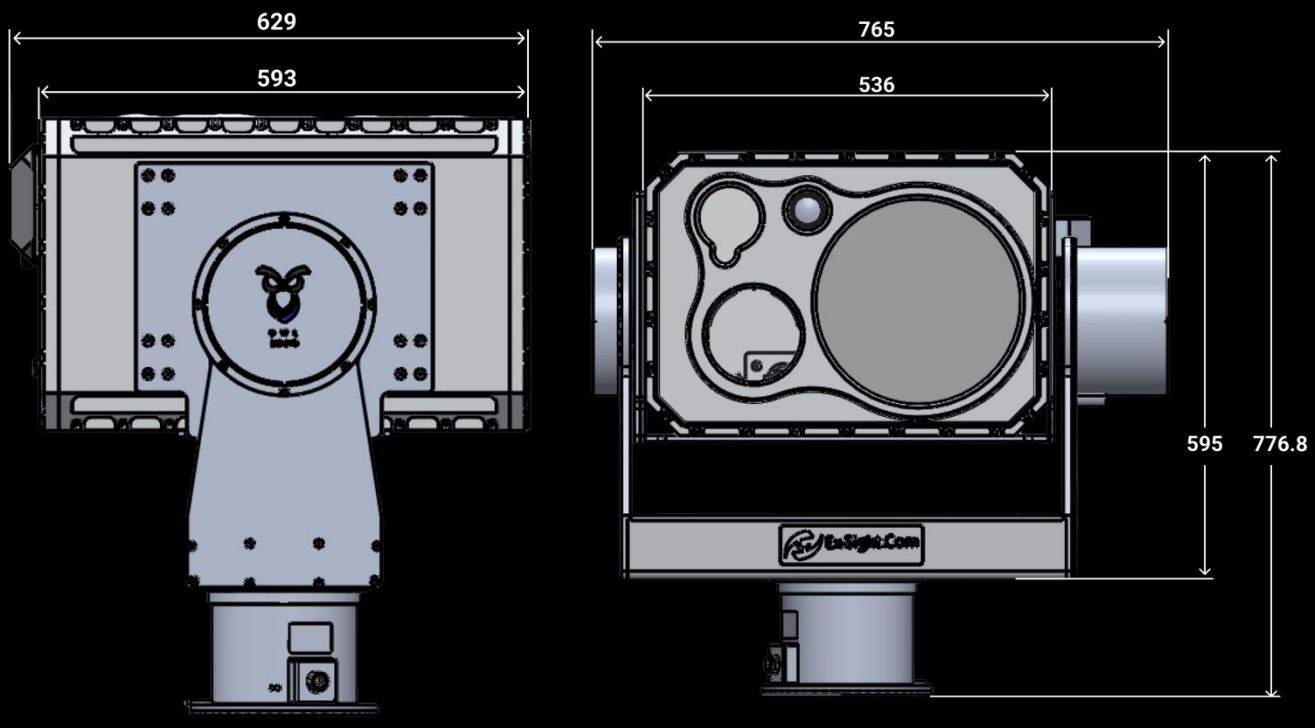

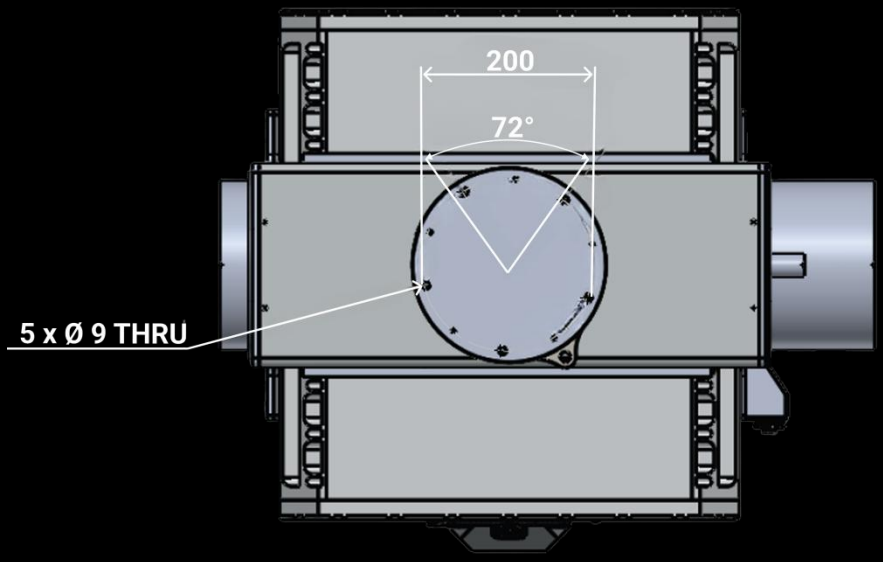

EX-SIGHT ADVANCED ELECTRO-OPTICS

DEEPSPHERE

INTEGRATED ELECTRO-OPTIC DEVELOPMENT GIMBAL



DETECT. IDENTIFY. DOMINATE.

SightDESK.	complete software solution, control center application
Live Streaming.	Fusion | Day | Night | Scene Real-Time Streams
Telemetry Data.	Detectors, Trackers, LRF, Pan Tilt Data, INS
Geo-Position.	INS, GPS, Compass, IMU, GYRO, Mapping
Fire-Detector.	Day and Night fire risk detection
Storage.	Video/Audio Storage Manager, Logger
Alerts.	Alert manager. IO connectivity and LAN/WAN alerts
ATR.	Target Detection / Tracking / PTZ Tracker
Stabilization.	EIS (3 Axis Image) and Gyro Stabilization
Panorama.	Panorama Generator.
Video-RADAR	Automatic Detection/Tracking for Specified Zones
Customized GUI.	Win forms or Web
Code.	Ready to run Code examples and Open Source .Net software interface
Discovery Tool.	Open-source discovery tool with your brand
Secured VLAN.	with Single IP Address to the device

DEEPSPHERE

INTEGRATED ELECTRO-OPTIC DEVELOPMENT GIMBAL

MODEL	MWIR 15-300	LWIR 25-150	LWIR 20-100	LWIR HD 25-75
LOW LIGHT DAY SENSOR	3.0MP Global Shutter Zoom Block Optical x30 Digital x16 Resolution 2048 x 1536 @ 30fps Focal Length 5,5 mm-165 mm FOV 46,5° - 2,2° Or 3.7MP SONY IMX675 Zoom Block Optical x40 Digital x32 Resolution 2560 x 1440 @ 30fps Focal Length 4,25 mm-170 mm FOV 73,8° - 2,16°			
DAY WINDOW	SAPPHIRE			
NIGHT SENSOR	COOLED MWIR x20 Zoom 15-300 mm F4,0 **FOV 1,83° to 35,5°**	LWIR 640x512 x6 Zoom 25-150mm **FOV 17,5° to 2,93°**	LWIR 640x512 x5 Zoom 20-100mm **FOV 22,5° to 4,4°**	LWIR 1280x1024 x3 Zoom 25-75mm **FOV 32°to 10,9°**
NIGHT WINDOW	GE/SILICON windows, Size: ϕ92.6x5mm, AR/DLC			
MOUNTING	Horizontal / Vertical Installation			
Thermal DRI – Detection, Recognition, Identification				
DETECTION (m) Human/NATO target	8,660/14,500	4,300/9,583	2,886/6,388	2,165/4,791
RECOGNITION (m) Human/NATO target	4,330/9,583	2,165/4,791	1,443/3,194	1,082/2,395
IDENTIFICATION (m) Human/NATO target	3,247/7,187	1,623/3,593	1,082/2,395	812/1,797
LRF Laser Range Finder	8KM NATO Target, Precision 0.01 – 0.5 m, Beam divergence 0.6 mrad, Eye safe Laser Class 1			
NPU	CPU Intel® Core™ Ultra Processors ,RAM 64GB, SSD 1TB ,INTEL® ARC™			
POWER	24-48VDC			
DIMENSIONS (mm)	379,3 x 488,6 x 302 Panel Ø300 base Ø302			
INTERFACE	ETHERNET INTERFACE, RTSP Streaming, DEEPSIGHT SDK			
CONNECTOR	Hermetic Stainless Steel D38999/23YC35PN			
WEIGHT (Kg)	20 Kg			
IP RATE	Sealed IP67			

*DRI Calculation according to Johnson Criteria (Lines 3/6/8 D/R/I)

DEEPSPHERE

INTEGRATED ELECTRO-OPTIC DEVELOPMENT GIMBAL

MODEL	SWIR HD 7.1-200
LOW LIGHT DAY SENSOR	3.0MP Global Shutter Zoom Block Optical x30 Digital x16 Resolution 2048 x 1536 @ 30fps Focal Length 5,5 mm-165 mm FOV 46,5° - 2,2° **Or** 3.7MP SONY IMX675 Zoom Block Optical x40 Digital x32 Resolution 2560 x 1440 @ 30fps Focal Length 4,25 mm-170 mm FOV 73,8° - 2,16°
DAY WINDOW	SAPPHIRE GLASS
NIGHT SENSOR	SWIR 1280x1024 x28 Zoom 7.1-200mm FOV 48,5° to 1,83°
NIGHT WINDOW	GE/SILICON windows
MOUNTING	Horizontal / Vertical Installation
	SWIR DRI – Detection, Recognition, Identification
DETECTION (m) Human/NATO target	13,856/30,666
RECOGNITION (m) Human/NATO target	6,928/15,333
IDENTIFICATION (m) Human/NATO target	5,196/11,500
LRF Laser Range Finder	•8KM NATO Target, Precision 0.01 – 0.5 m, Beam divergence 0.6 mrad, Eye safe Laser Class 1
NPU	CPU Intel® Core™ Ultra Processors, RAM 64GB, SSD 1TB, INTEL® ARC™
DIMENSIONS (mm)	379,3 x 488,6 x 302 Panel Ø300 base Ø302
INTERFACE	ETHERNET INTERFACE
CONNECTOR	Hermetic Stainless Steel D38999/23YC35PN
WEIGHT (Kg)	20 Kg
IP RATE	Sealed IP67 Nitrogen Purged

*DRI Calculation according to Johnson Criteria (Lines 3/6/8 D/R/I)

DEEPSPHERE

INTEGRATED ELECTRO-OPTIC DEVELOPMENT GIMBAL

DIMENSIONS: (L x W x H, mm) 379,3 x 488,6 x 302
Panel Ø300
Base Ø302

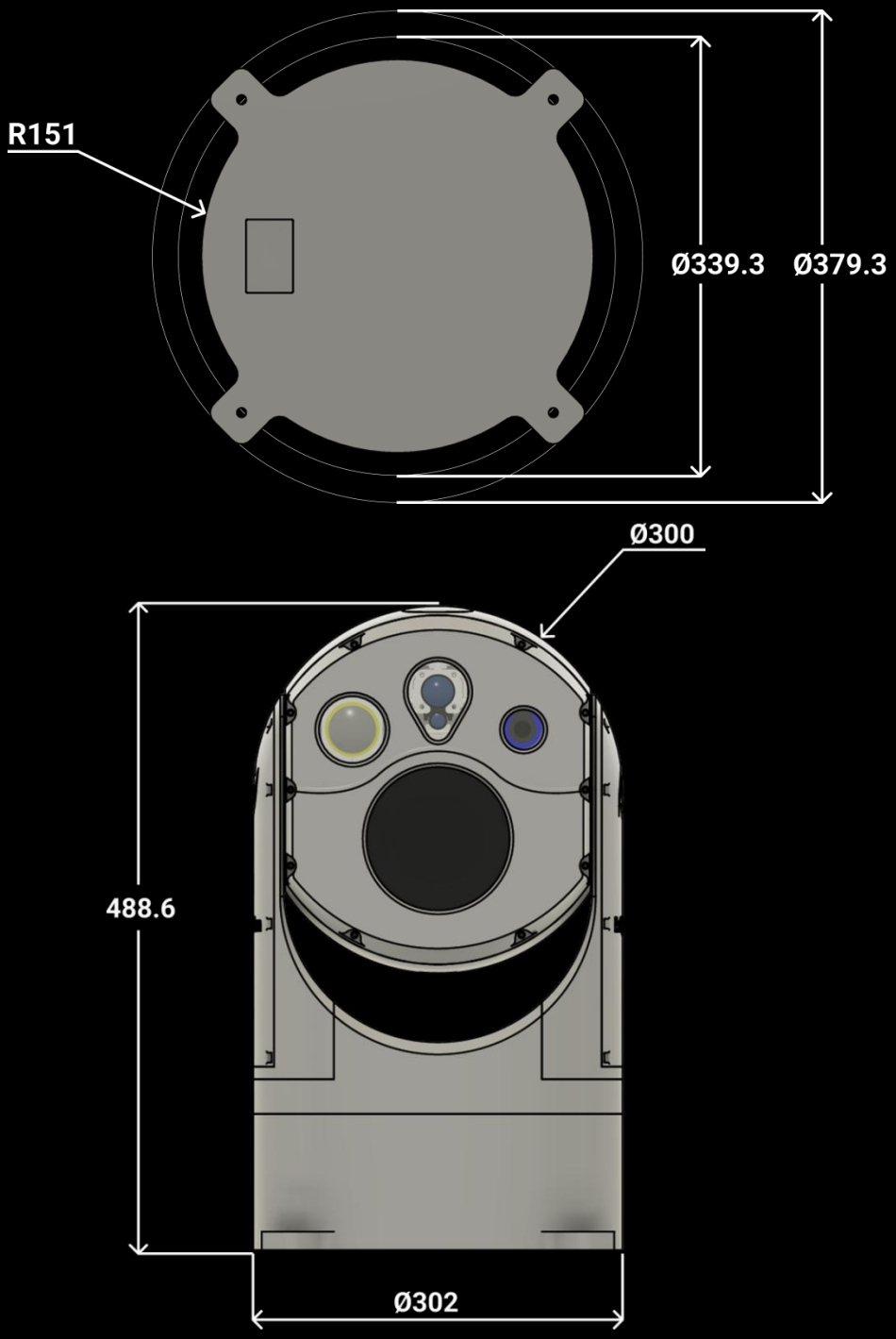

EX-SIGHT ADVANCED ELECTRO-OPTICS

SPHERE SERIES

DUAL SENSOR RUGGED GIMBAL



EX-SIGHT ADVANCED ELECTRO-OPTICS

SPHERE SERIES

DUAL SENSOR RUGGED GIMBAL





MODEL	SPHERE-F	SPHERE-DUAL
LOW LIGHT DAY SENSOR	3.0MP Global Shutter Zoom Block Optical x30 Digital x16 Resolution 2048x1536 @ 30fps Focal Length 5,5 mm-165 mm FOV 46,5° - 2,2°	3.0MP Global Shutter Zoom Block Optical x30 Digital x16 Resolution 2048x1536 @ 30fps Focal Length 5,5 mm-165 mm FOV 46,5° - 2,2°
DAY WINDOW	SAPPHIRE GLASS	
NIGHT SENSOR	Single Sensor: LWIR 640x512 Up to 35 mm, 12,5 deg	DUAL Sensor: 1st LWIR 640x512; 5,8mm, 70 deg 2nd LWIR 640x512; 60 mm, 7,3 deg
NIGHT WINDOW	GE/SILICON window	
	LWIR DRI Detection, Recognition, Identification	
DETECTION (m) Human/NATO target	35 mm 1,010/2,236	60 mm 1,732/3,833
RECOGNITION (m) Human/NATO target	35 mm 360/798	60 mm 866/1,916
IDENTIFICATION (m) Human/NATO target	35 mm 270/599	60 mm 649/1,437
LRF Laser Range Finder	Up to 2 Km NATO Target	N/A
POWER	48 VDC external PSU	
DIMENSIONS (mm)	245 x 216 x 347 mm ⌀ 185	217 x 203 x 315,5 mm ⌀ 190
INTERFACE	ETHERNET INTERFACE, RTSP STREAMING	
CONNECTOR	Hermetic Stainless Steel D38999/23YC35PN	
WEIGHT (Kg)	13 Kg	9 Kg
IP RATE	Sealed IP67	

*DRI Calculation according to Johnson Criteria (Lines 3/6/8 D/R/I)

Ex-Sight.Com
ONE SHOT

SPHERE SERIES

DUAL SENSOR RUGGED GIMBAL

DIMENSIONS: (L x W x H, mm) 245 x 216 x 347
Panel ⌀ **185**

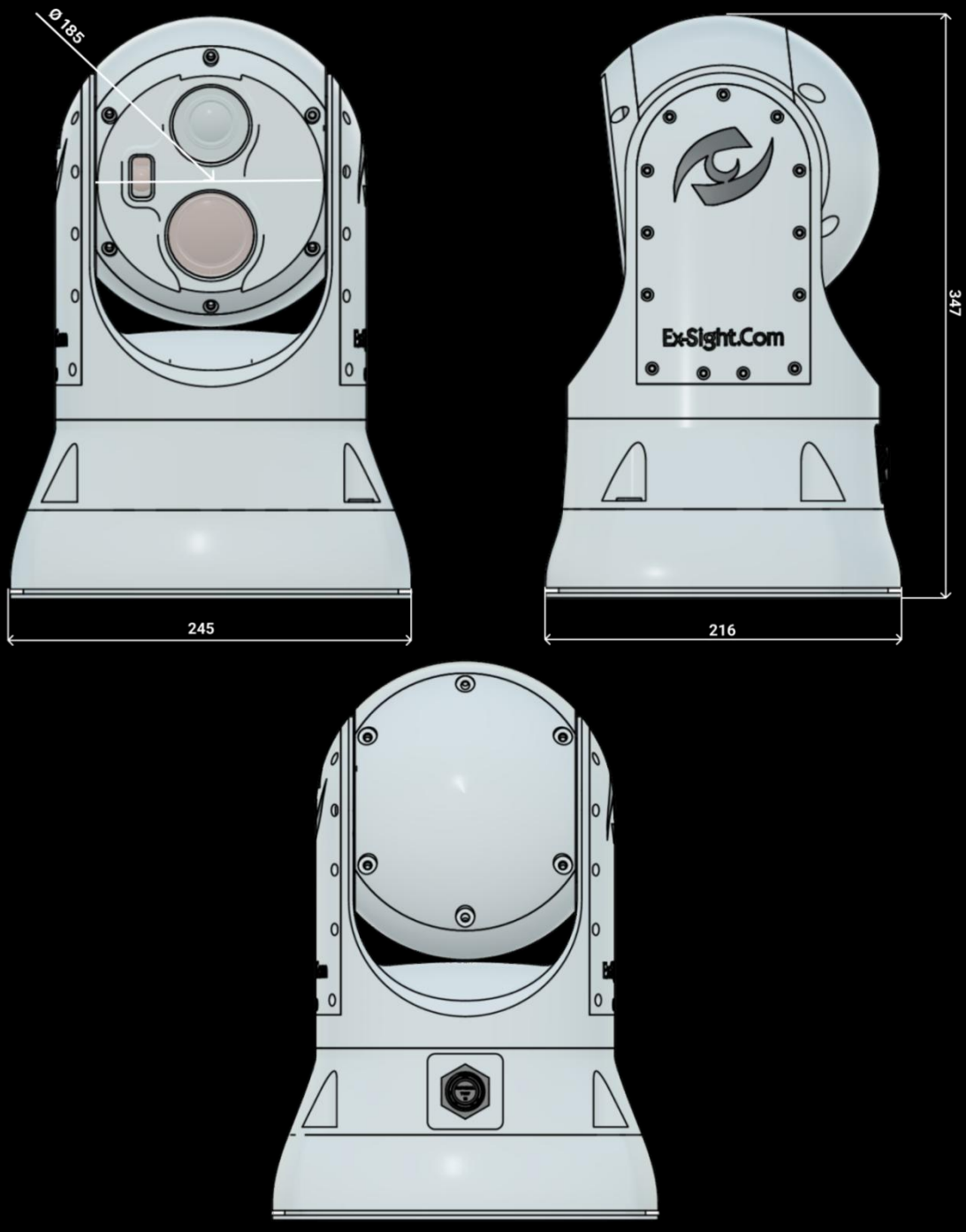

SPHERE SERIES

DUAL SENSOR RUGGED GIMBAL

DIMENSIONS: (L x W x H, mm) 217 x 203 x 315.5
Panel ⌀ **190**

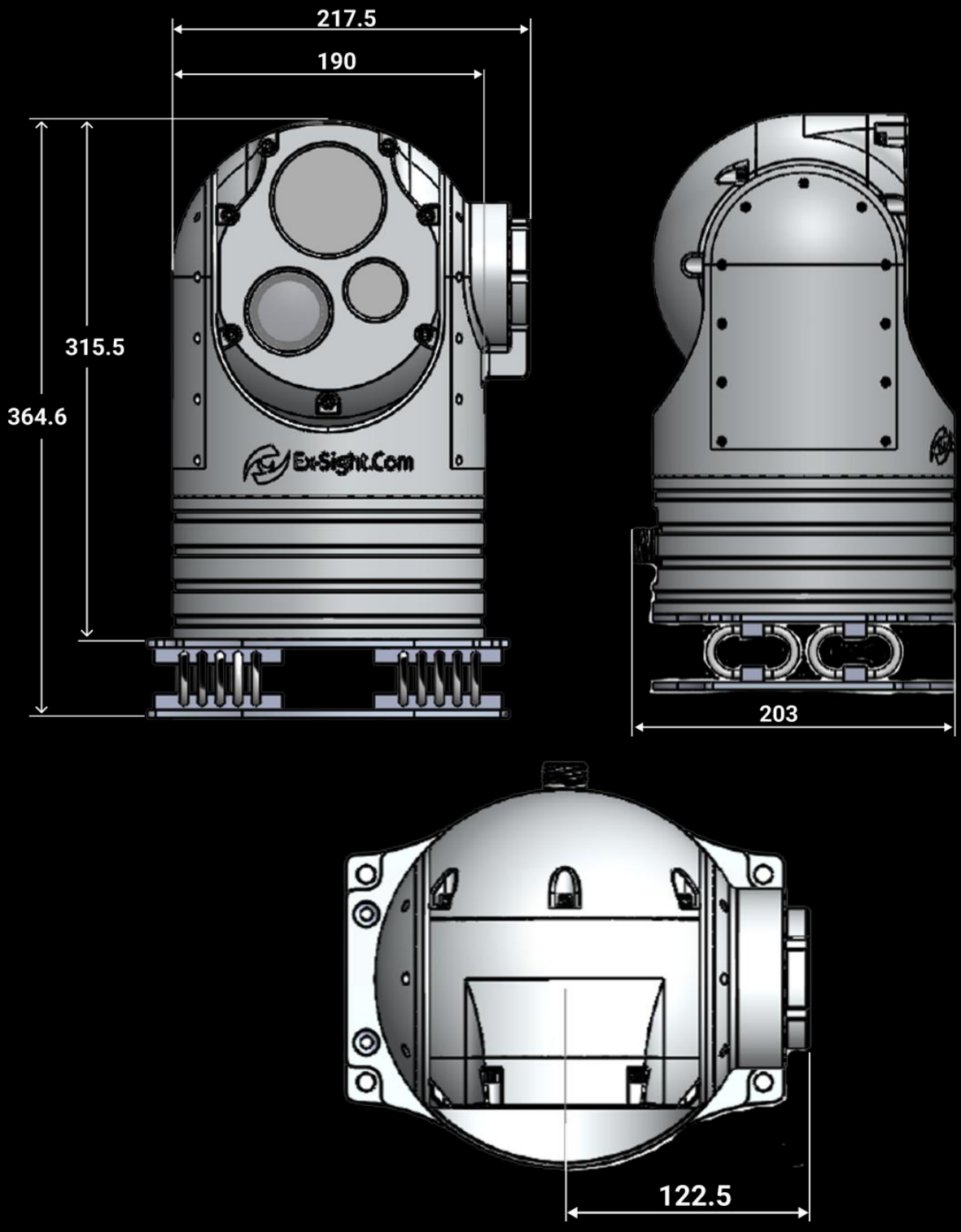

HDPT-SERIES

HEAVY DUTY STABILIZED PAN TILT POSITIONERS



EX-SIGHT ADVANCED ELECTRO-OPTICS

HDPT-SERIES

HEAVY DUTY STABILIZED PAN TILT POSITIONERS



MODEL	OWL	OWL225	OWL1000	OMEGA Ω
MOUNTING TYPE	U Mount	U Mount	U Mount	Ω (OMEGA) TOP + Sides
TILT	Max ±90° Deg Max. Motor Torque (NM) 35 / 50 / 150			
PAN	Cont. 360° Deg Motor Torque (NM) 35 / 50 / 150			
TRUE NORTH INS GPS	DUAL ANTENNA GNSS-AIDED INERTIAL NAVIGATION*			
MAX.SPEED	20 RPM, up to 120°/sec			
MAX. PAYLOAD	50 Kg	50 Kg	70 Kg	80 Kg
DIMENSIONS (mm)	416 x 210 x 442	505 x 255 x 624	778 x 667 x 403	794 x 210 x 419
WEIGHT(Kg)	22 Kg	25 Kg	40 Kg	32 Kg
IP RATE	IP66			
POWER	24 - 48VDC			



PT-SERIES

LIGHT RUGGED STABILIZED POSITIONERS

			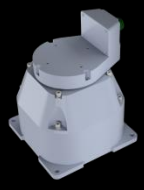
MODEL	**ALMA**	**ADVA**	**COMPASS**
MOUNTING TYPE	Top Mount	Top Mount	Top Mount
TILT	Max ±90° Deg 35 NM	Max ±90° Deg 35 NM	-
PAN	Cont. 360° Deg 35 NM	-	Cont. 360° Deg 35 NM
TRUE NORTH INS GPS	DUAL ANTENNA GNSS-AIDED INERTIAL NAVIGATION*	Optional VN100 INS/ VN200 INS	-
MAX.SPEED	30 RPM, up to 180°/sec		
MAX. PAYLOAD	15 Kg	9 Kg	9 Kg
DIMENSIONS (mm)	218 x 163 x 296	229 x 210 x 158	170 x 170 x 168,5 (+50)
WEIGHT(Kg)	8,6 Kg	3,5 Kg	4,5 Kg
IP RATE	IP66		
POWER	24-48VDC		



OWL-PT

HEAVY DUTY STABILIZED PAN TILT POSITIONER

DIMENSIONS: without EO **(L x W x H, mm)** 442 x 416 x 210
WEIGHT: 22 Kg

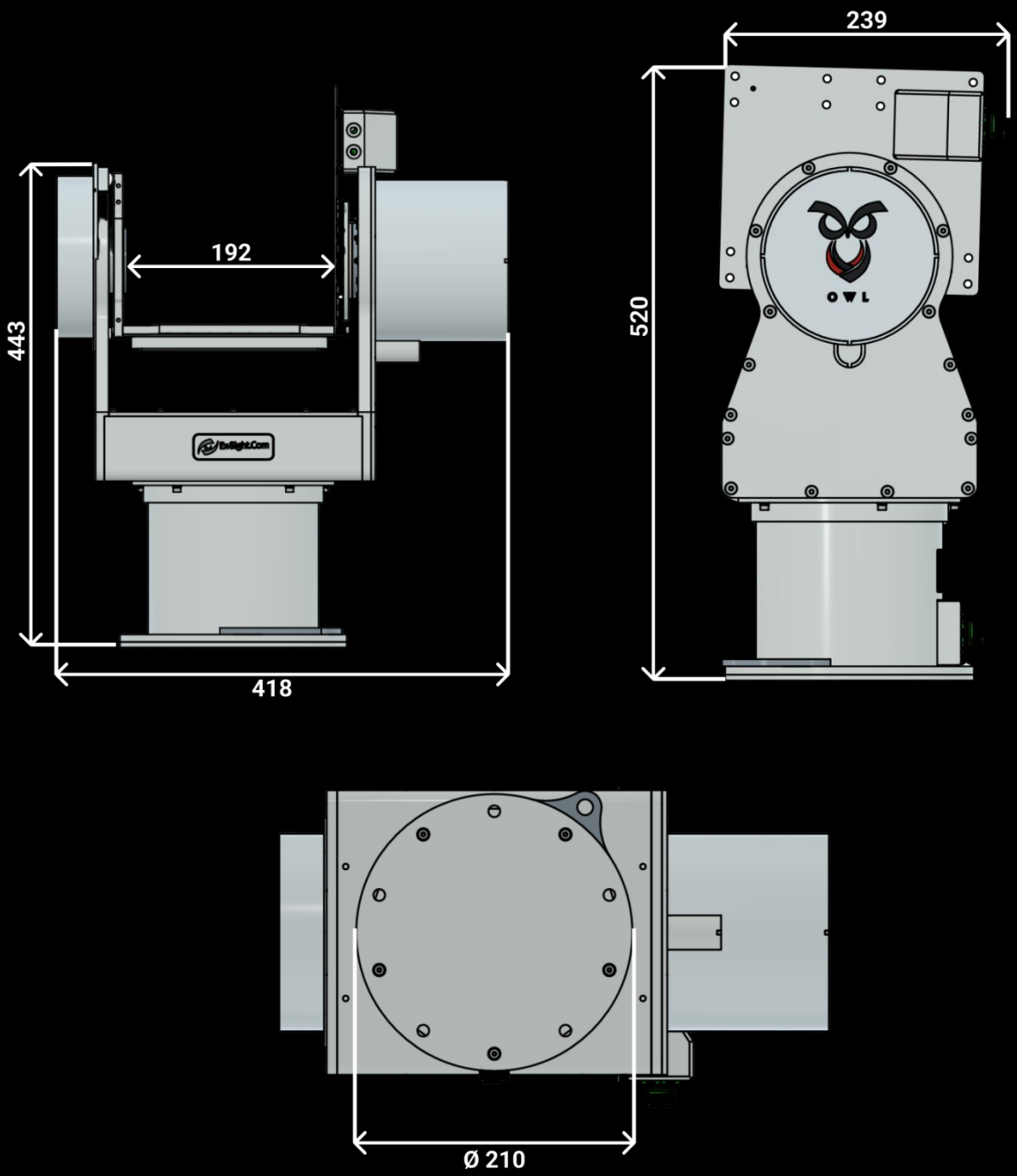

OWL-PT

HEAVY DUTY STABILIZED PAN TILT POSITIONER

DIMENSIONS: with camera **(L x W x H, mm)** 544 x 416 x 210

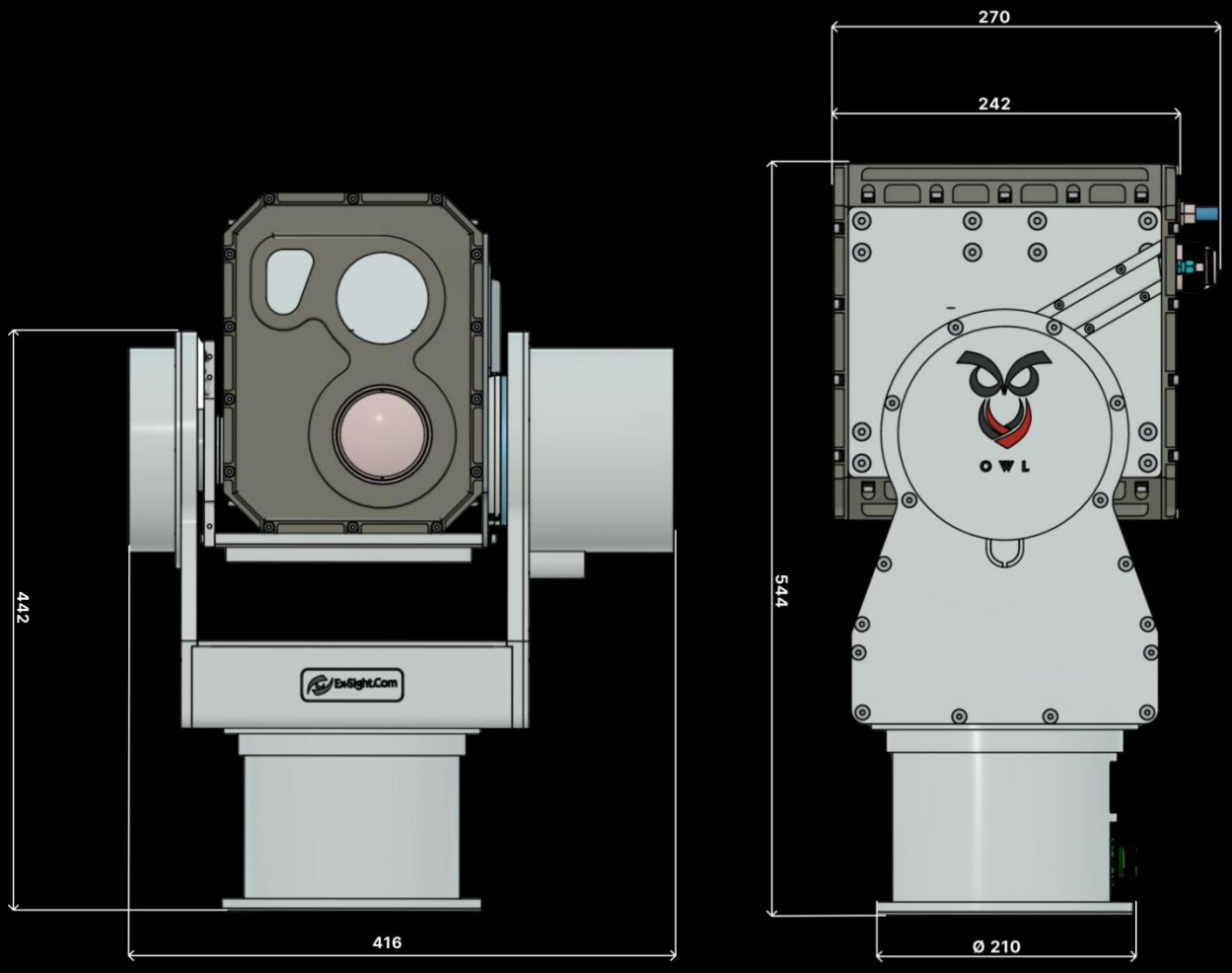

OWL225-PT

HEAVY DUTY STABILIZED PAN TILT POSITIONER

DIMENSIONS: without camera **(L x W x H, mm)** 624 x 505 x 255
WEIGHT: 25 Kg

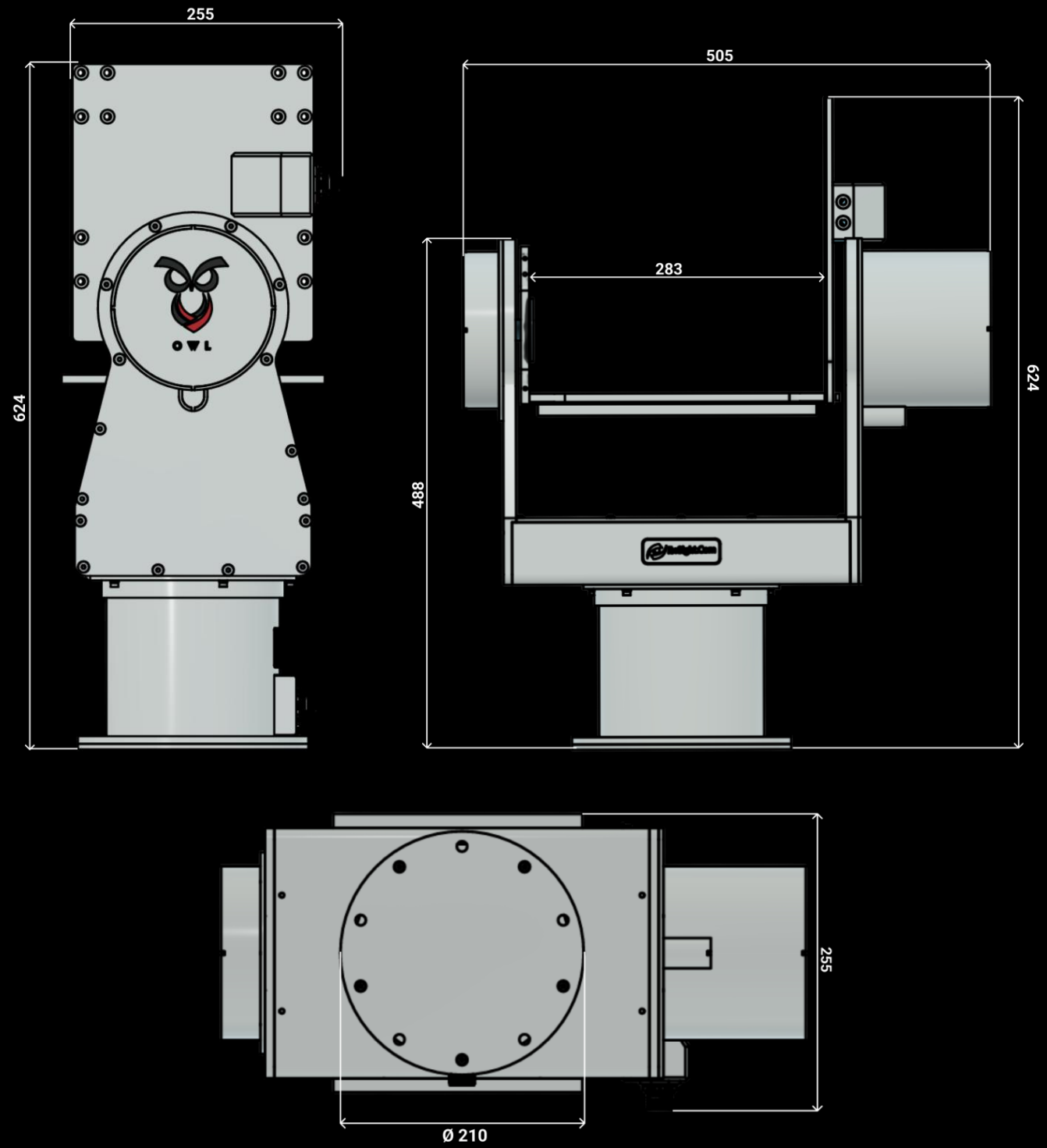

OWL225-PT

HEAVY DUTY STABILIZED PAN TILT POSITIONER

DIMENSIONS: with camera **(L x W x H, mm)** 707 x 505 x 367

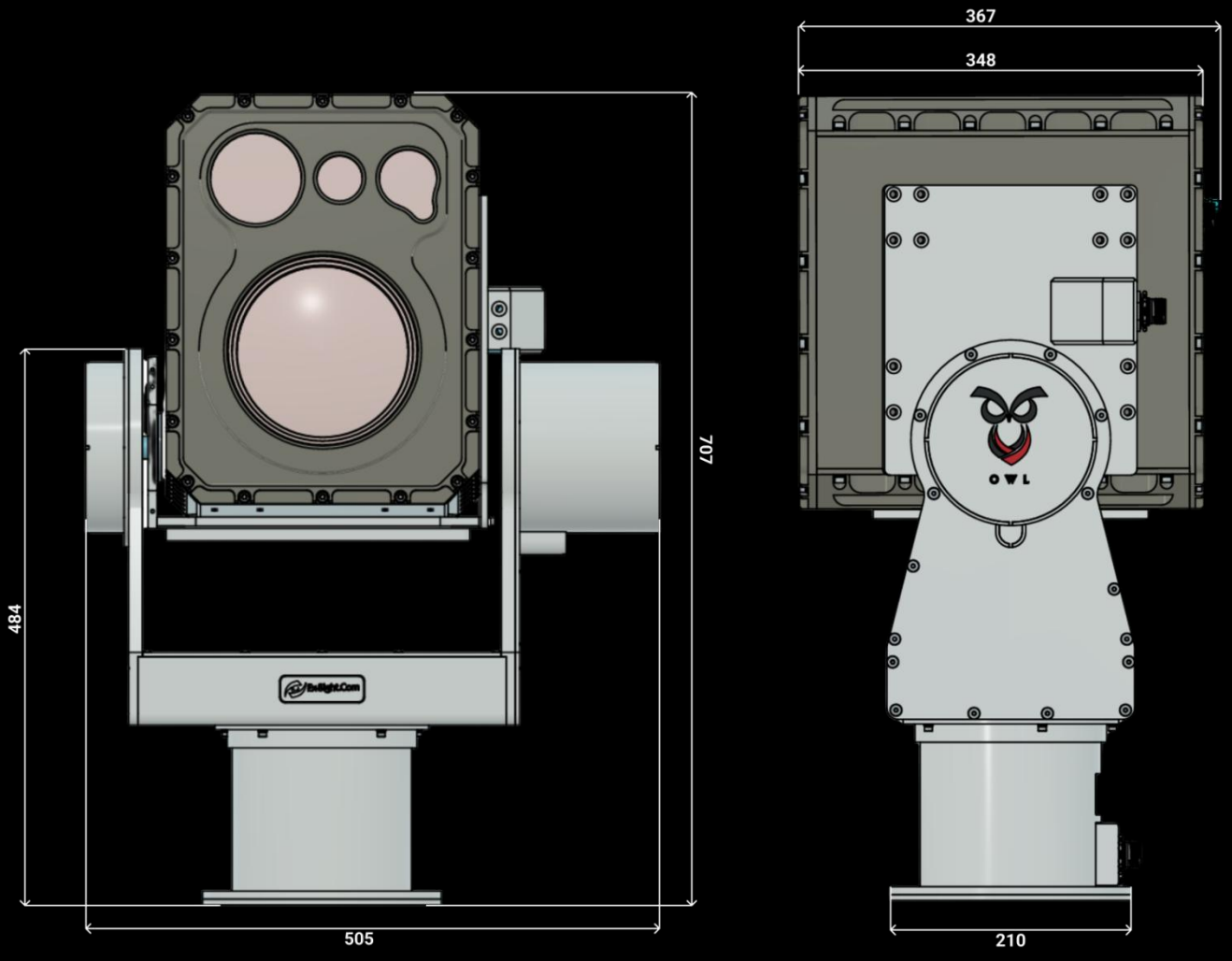

OWL1000-PT

HEAVY DUTY STABILIZED U-SHAPED PAN TILT POSITIONER

DIMENSIONS without camera **(L x W x H, mm)** 778 x 667 x 403

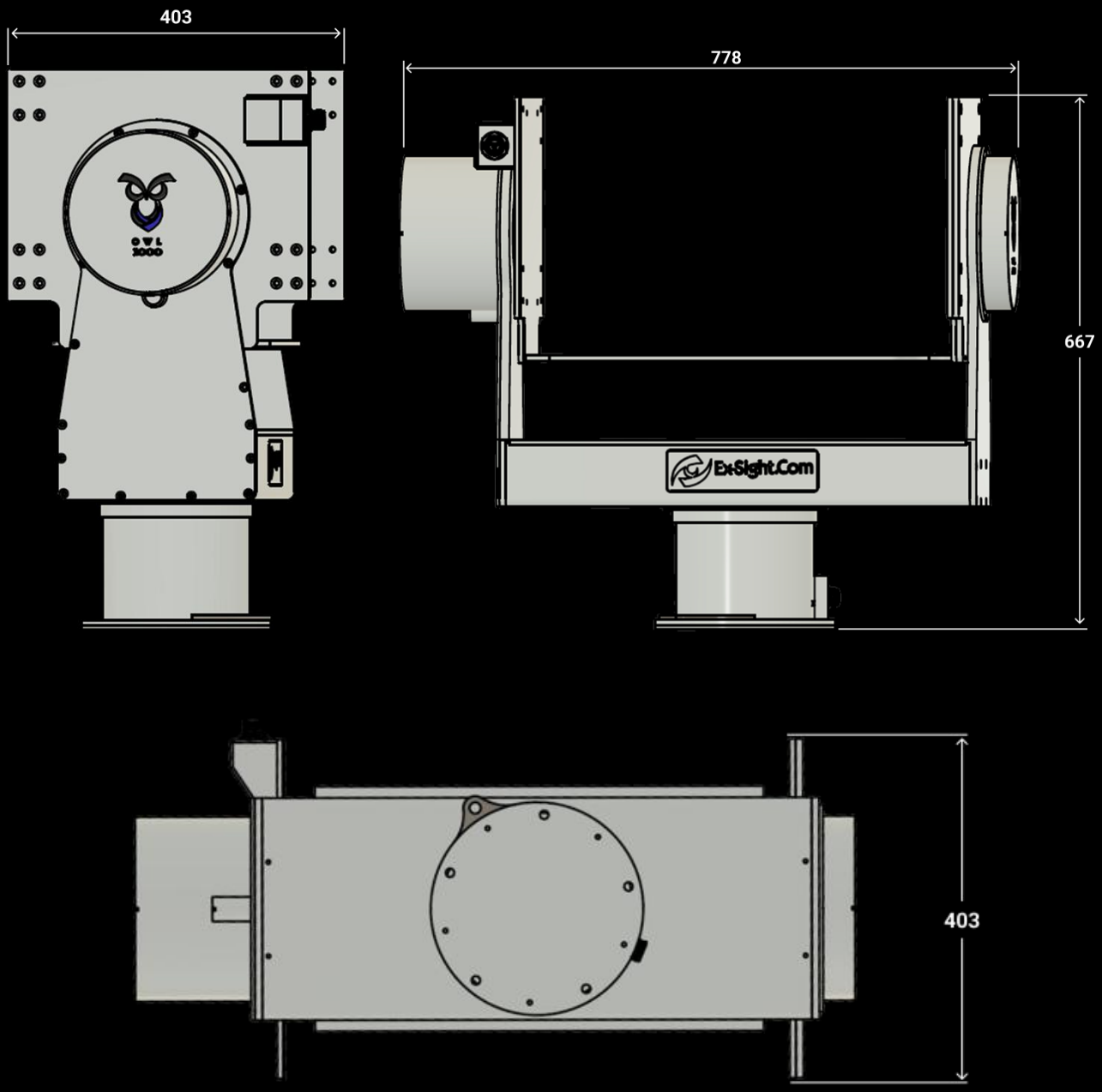

OWL1000-PT

HEAVY DUTY STABILIZED U-SHAPED PAN TILT POSITIONER

DIMENSIONS with camera **(LxWxH, mm)** 777x765x629

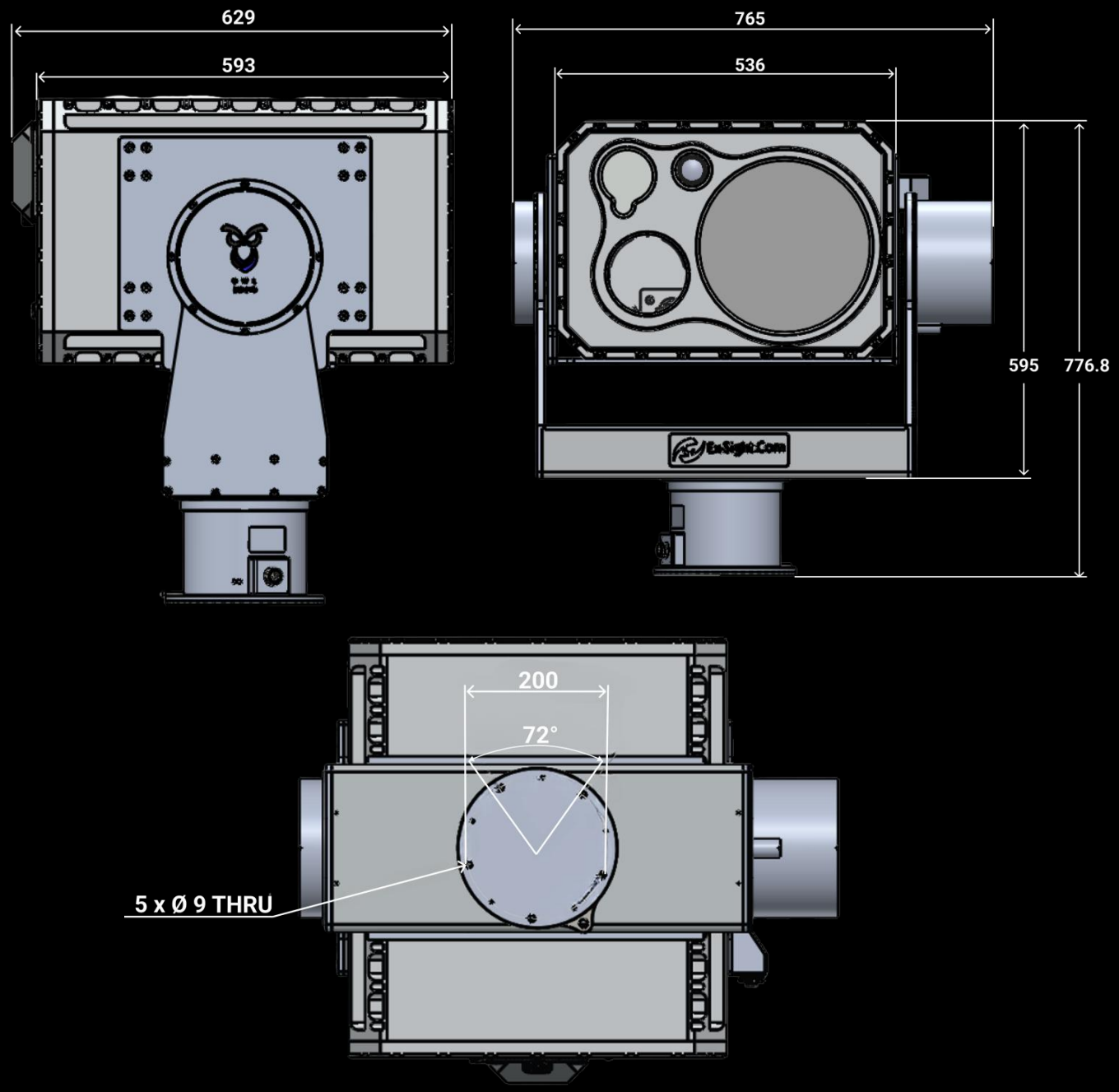

OMEGA-PT

HEAVY DUTY STABILIZED Ω-SHAPED PAN TILT POSITIONER

DIMENSIONS without camera **(L x W x H, mm)** 794 x 210 x 419
WEIGHT 32 Kg

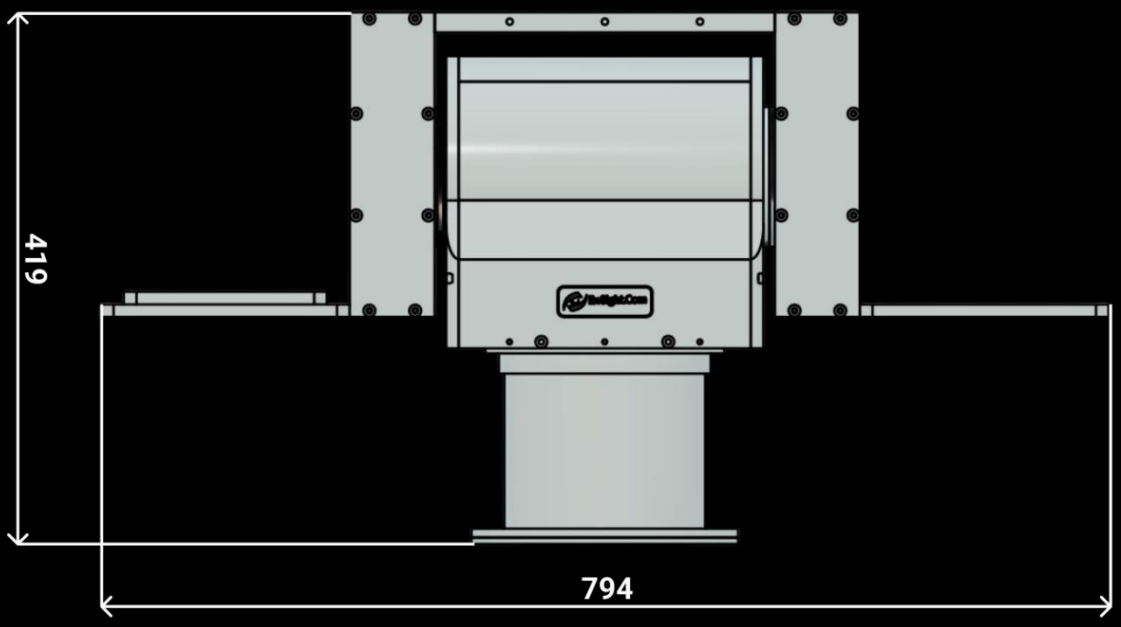

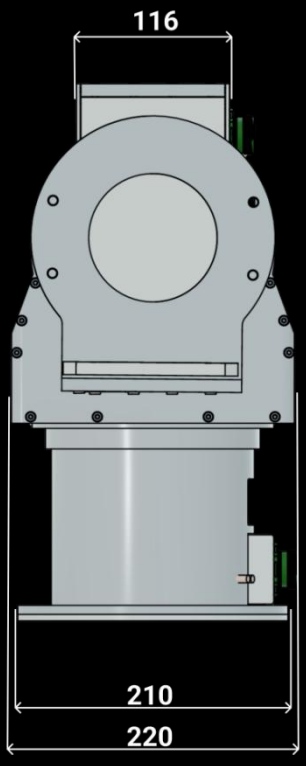

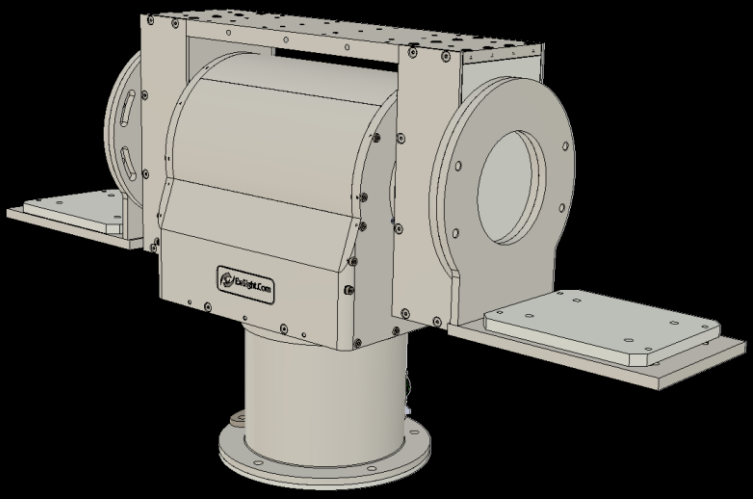

ALMA

HEAVY DUTY MINI STABILIZED PAN TILT POSITIONER

DIMENSIONS: (L x W x H, mm) 218 x 163 x 296
WEIGHT: 8,6 Kg

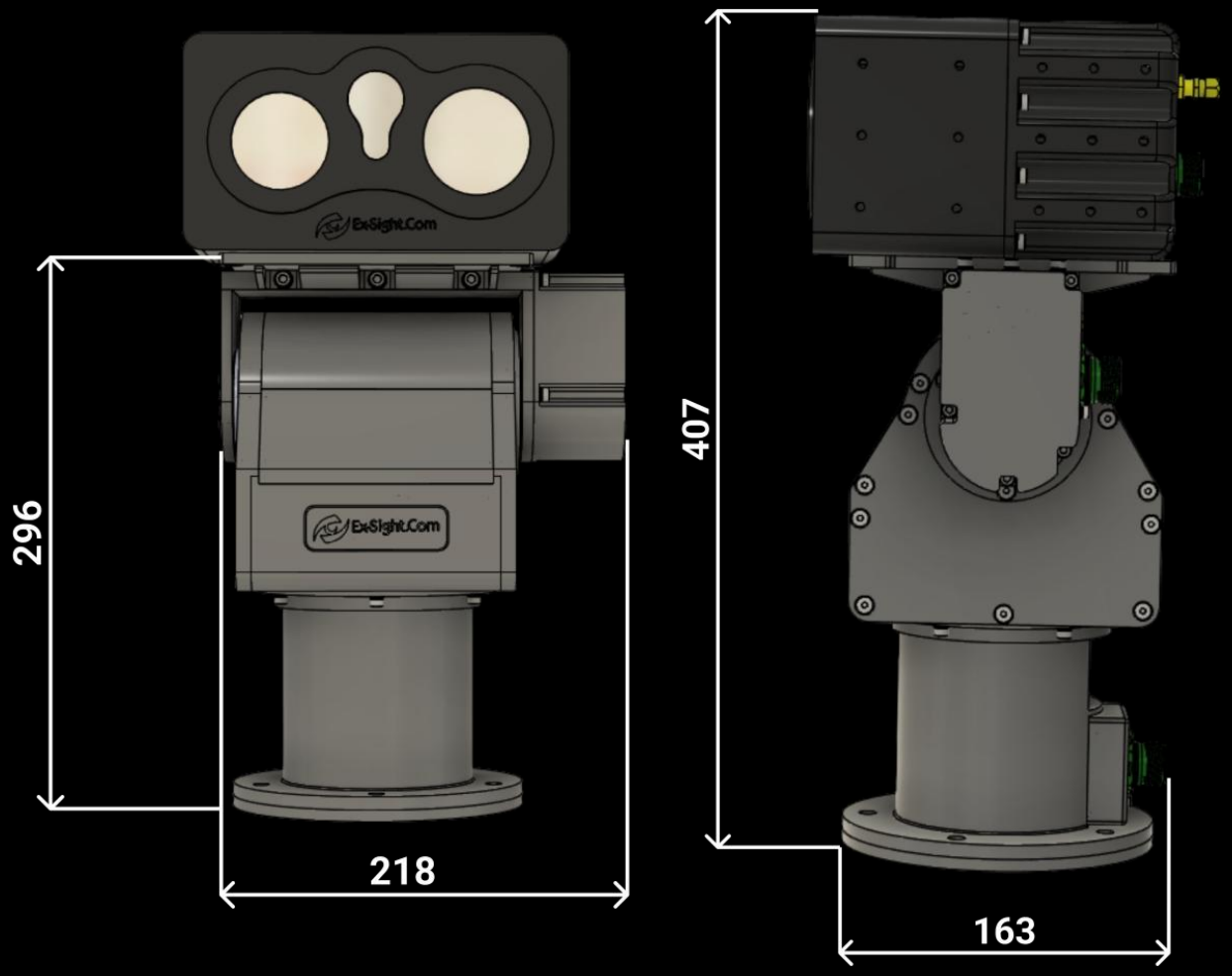

ADVA

LIGHT RUGGED STABILIZED TILT

DIMENSIONS: without camera **(L x W x H, mm)** 229 x 210 x 158
WEIGHT: 3,5 Kg

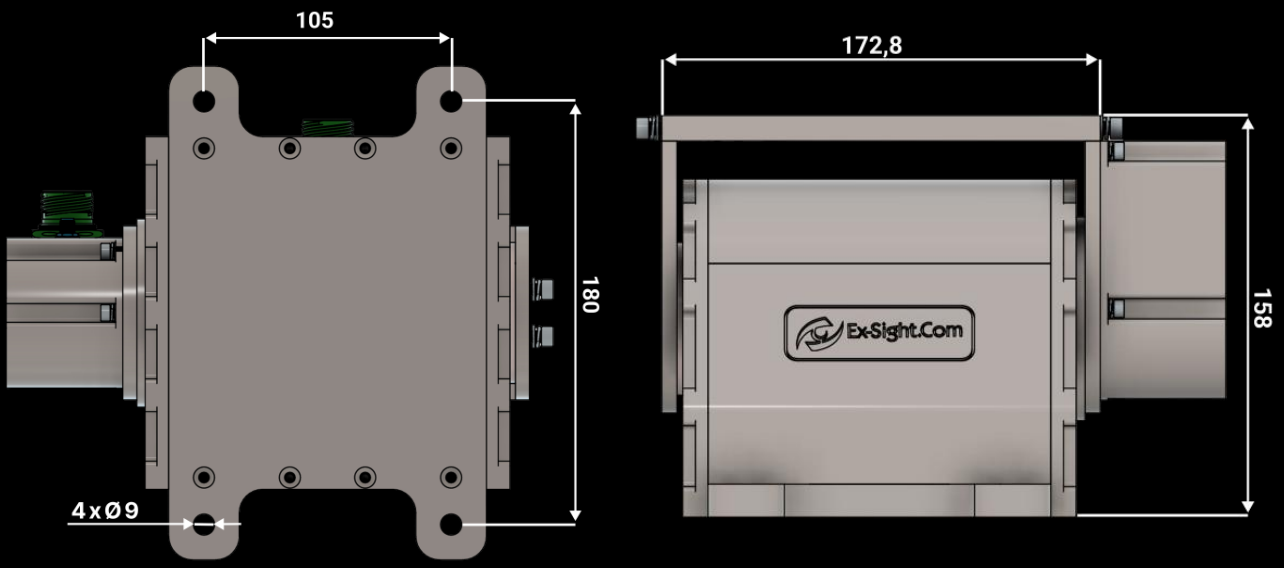

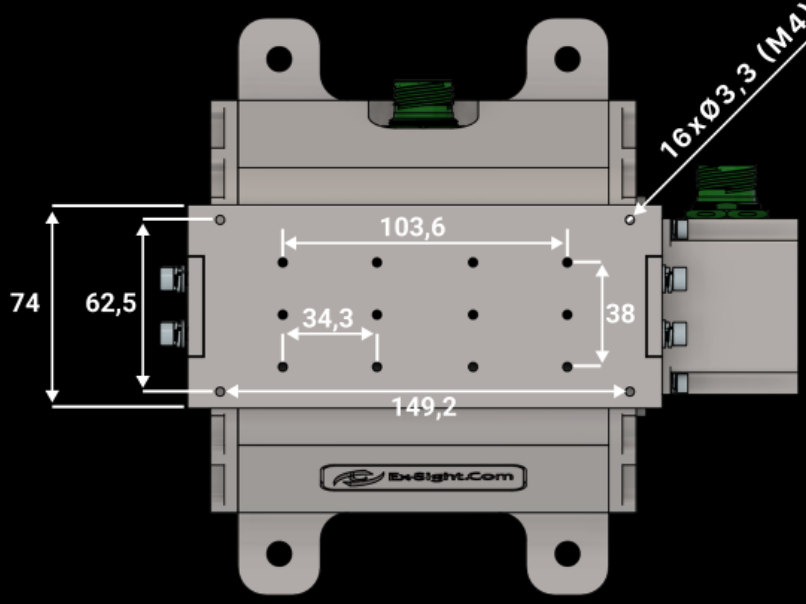

ADVA-PT

LIGHT RUGGED STABILIZED TILT

DIMENSIONS: with camera OZ1280 **(L x W x H, mm)** 235 x 210 x 269
WEIGHT: with camera OZ1280 8,5 Kg

DIMENSIONS: *with camera Fusion640* **(L x W x H, mm)** 233 x 210 x 255
WEIGHT: with camera FUSION640 6 Kg

CAMERA OZ1280

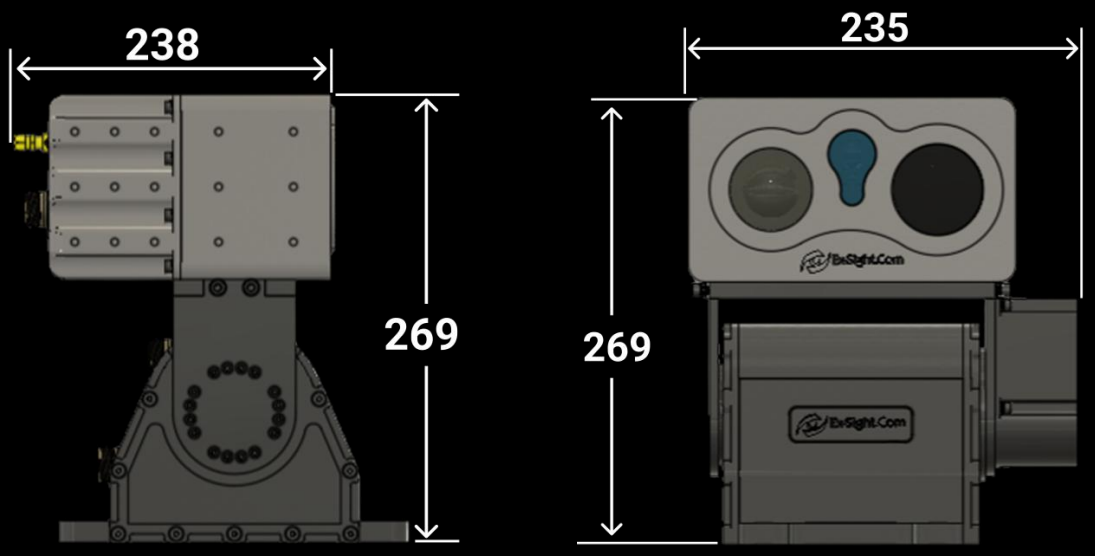

CAMERA FUSION640

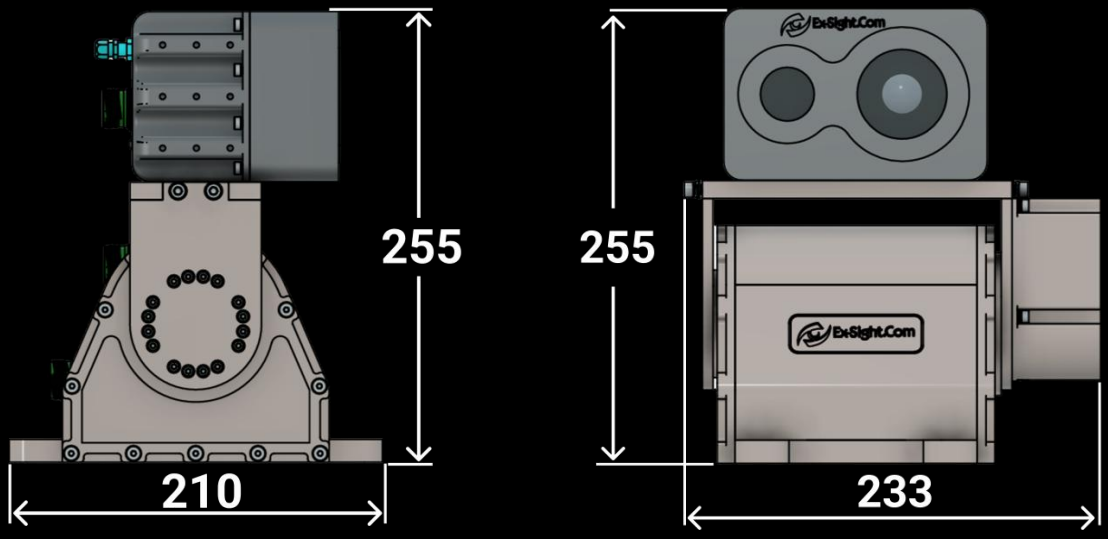

COMPASS

LIGHT RUGGED STABILIZED PAN

DIMENSIONS: without camera **(L x W x H, mm)** 170 x 170 x 168,5 (+50)
WEIGHT: 4,5 Kg

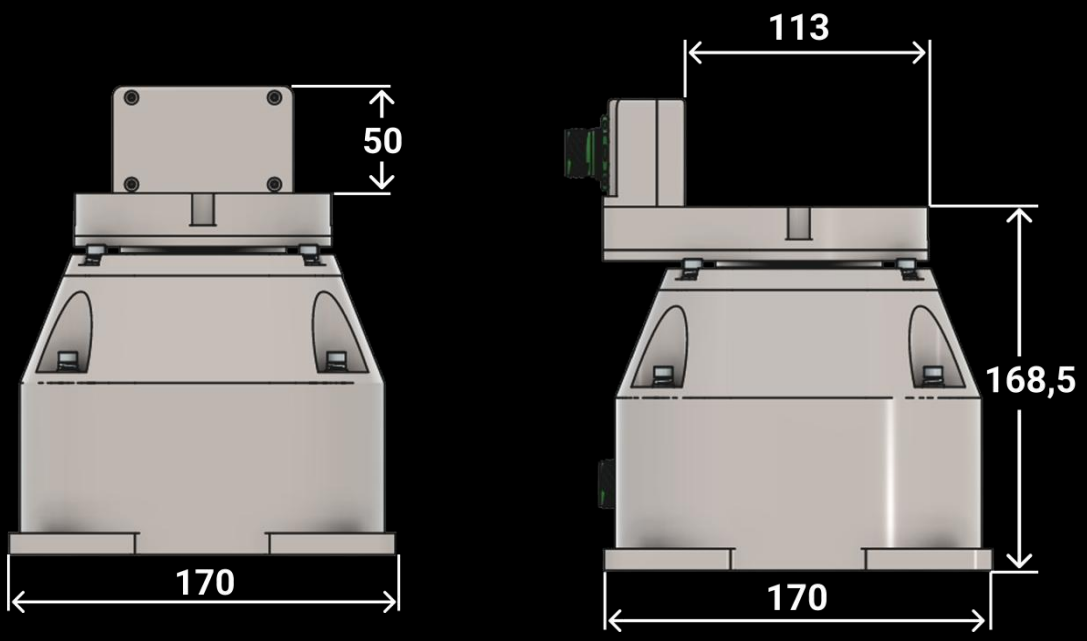

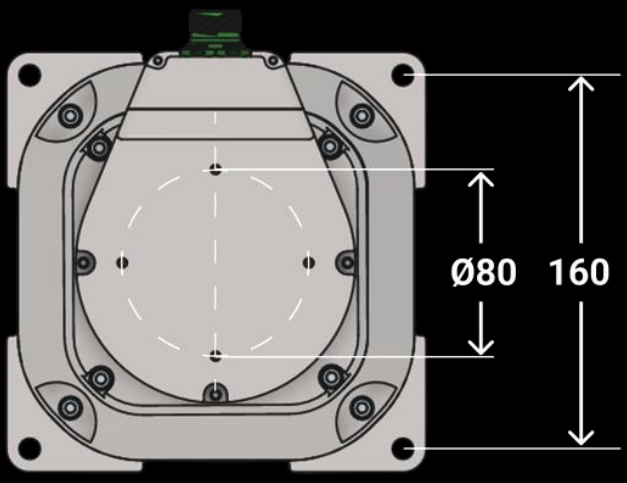

COMPASS

LIGHT RUGGED PAN

DIMENSIONS: with camera FUSION640 **(L x W x H, mm)** 170 x 198 x 306
WEIGHT: 7,8 Kg

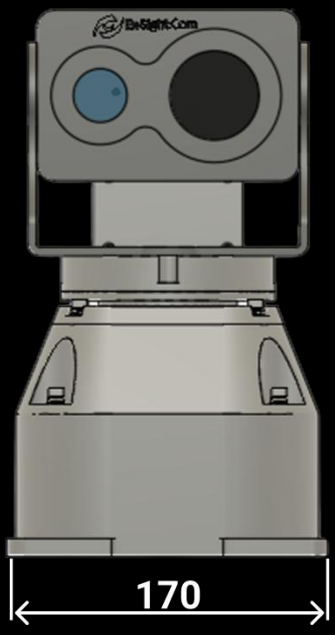

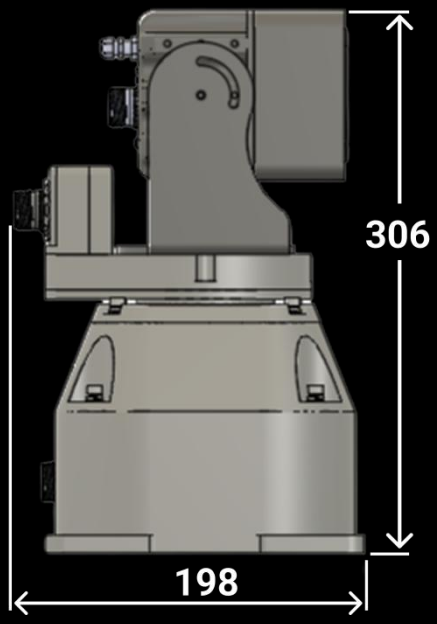



ALMADUAL

DUAL SENSOR RUGGED GIMBAL



ALMADUAL

DUAL SENSOR RUGGED GIMBAL

CHASSIS	
MATERIALS	Internal: Aluminum, Cover: PETG-CF/ABS

LWIR SENSOR	Camera A	Camera B
DETECTOR	Uncooled VOx FPA	Uncooled VOx FPA
RESOLUTION	640 × 512	640 × 512
PIXEL PITCH	12 µm	12 µm
FRAME RATE	50 fps	50 fps
SPECTRAL RANGE	8 µm- 14 µm	8 µm- 14 µm
FOCAL LENGTH OPTIONS	35 mm	4 mm
DIGITAL ZOOM	x8	x8
FOV LWIR (H*V)	12,5°×10,0°	88,4° x74,3°

DAY SENSOR	Camera A	Camera B
SENSOR	4K 8MP IMX 678 5MM F1.0	4K 8MP IMX 678 5MM F1.0
RESOLUTION	3840 x 2160 30fps	3840 x 2160 30fps
WDR	85 db	85 db
SHUTTER	Rolling	Rolling
FOV DAY	35 °	93 °

AZIMUTH & ELEVATION	2 Axes Movement, TILT max ± 90° deg PAN Cont. 360° Deg
SPEED	Max. 30 RPM, up to 180°/sec
ELECTRIC INTERFACE	Pigtail open wires / RJ45 / Power
POWER (PTsystem)	24 - 48 VDC



ALMADUAL

DUAL SENSOR RUGGED GIMBAL

DIMENSIONS: with camera **(L x W x H, mm)** 294,5 x 370 x 163,1

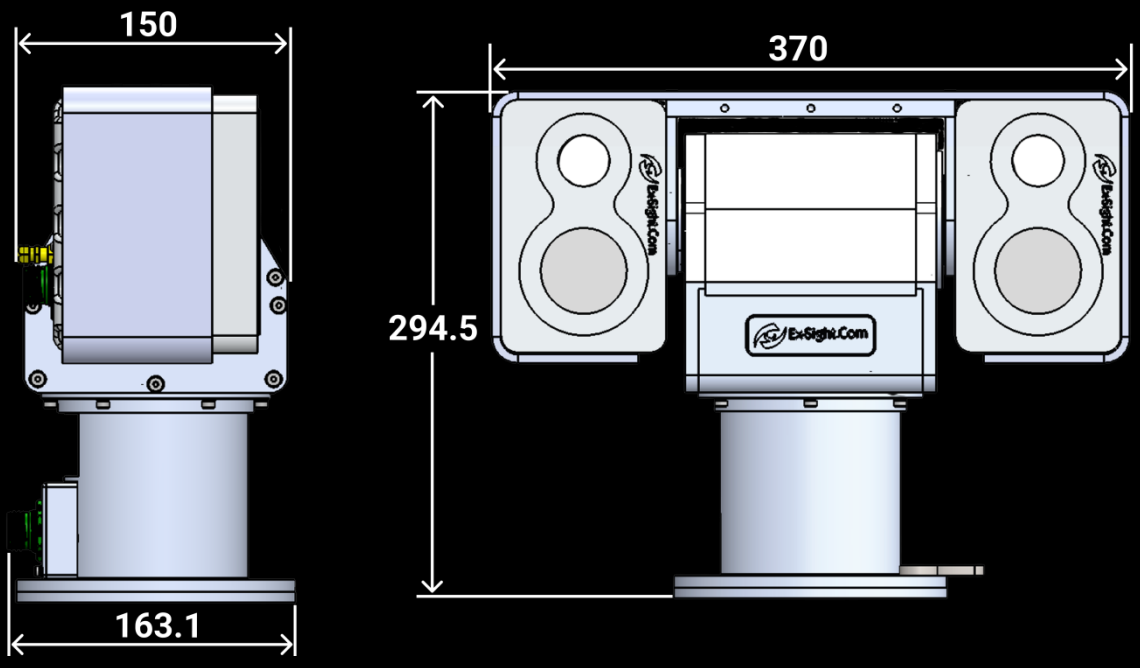

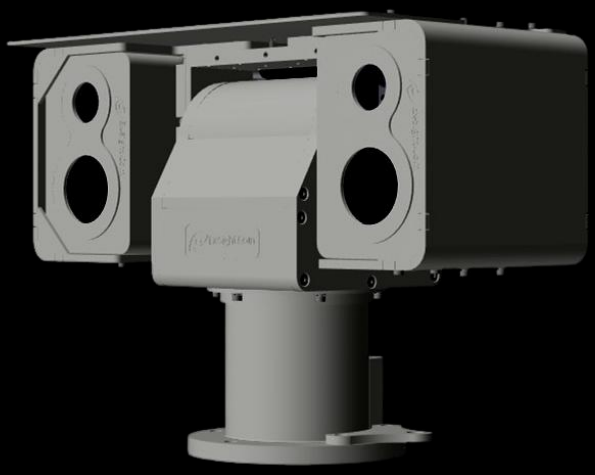

OZ SERIES

RUGGED DAY & NIGHT DRIVER VISION ENHANCER AND ELECTRO-OPTIC TRACKER



ONESHOT

- Up to 8.0MP 4K Day (VIS)
- Up to HD 1280 x 1024 Night
- Modular Integration for Manned & Unmanned Platforms
- Rugged Design, Hermetic Sealed IP-67, Nitrogen Purged
- Ethernet Interface, RTSP Streaming, Daisy Chain
- 9-36VDC Power Input

OZ SERIES

RUGGED DAY & NIGHT DRIVER VISION ENHANCER AND ELECTRO-OPTIC TRACKER

		
MODEL	**OZ-1280-F**	**OZ-25-75 / HD**
DAY SENSOR	GLOBAL SHUTTER X30 2048 x1536 30 fps H.265/H264	GLOBAL SHUTTER X30 2048x1536 30 fps H.265/H264
FOV DAY SENSOR	x30 ZOOM 5,5mm-162mm FOV (H) 46,5° to 2,2°	x30 ZOOM 5,5mm-162mm FOV (H) 46,5° to 2,2°
THERMAL SENSOR	UNCOOLED LWIR 12 µm 1280x1024 LENS 13mm 30 fps FOV (H) 61° (V) 45,9°	UNCOOLED LWIR 12 µm 1280x1024 or 640x512 LENS 25-75 mm **1280x1024** FOV H*V (11,7°x8,8°~ 34,2°x25,6°) **640x512** FOV H*V (5,9°x4,4°~ 17,5°x13,1°)
LRF	8 Km NATO TARGET	8 Km NATO TARGET

LWIR DRI

DETECTION (m) NATO/HUMAN target	830/375	4791/2165
RECOGNITION (m) NATO/HUMAN target	415/187	2395/1082
IDENTIFICATION (m) NATO/HUMAN target	311/140	1796/811

POWER	9-36VDC, NOMINAL 5.6W (MAX on LOAD 12W)	
DIMENSIONS (mm)	198 x 173 x 111	240 x 200 x 130
CONNECTOR	Stainless Steel Hermetic Connector **D38999/23YC35PN**	
WEIGHT (Kg)	4.7 Kg	8 Kg
IP RATE	IP67 Nitrogen Purged	

OZ 1280

RUGGED DAY & NIGHT DRIVER VISION ENHANCER AND ELECTRO-OPTIC TRACKER

DIMENSIONS: (L x W x H, mm) 198 x 173 x 111
WEIGHT: 4,7 Kg

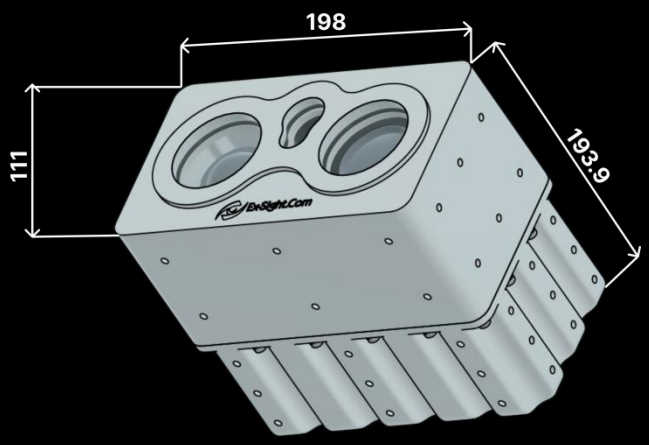

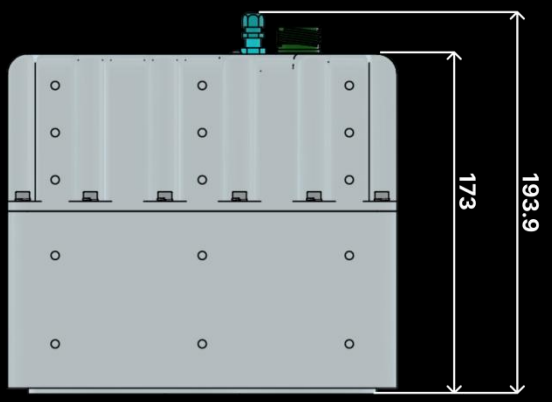



OZ 25-75/HD

RUGGED DAY & NIGHT DRIVER VISION ENHANCER AND ELECTRO-OPTIC TRACKER

DIMENSIONS: (L x W x H, mm) 240 x 200 x 130
WEIGHT: 8 Kg







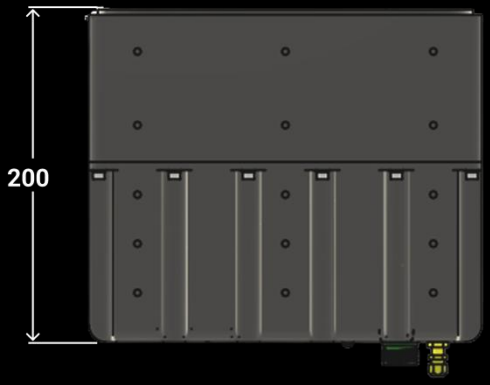

FUSION SERIES

RUGGED DAY & NIGHT DRIVER VISION ENHANCER AND ELECTRO-OPTIC TRACKER



ONESHOT

- Up to 8.0MP 4K Day (VIS)
- Up to HD 1280 x 1024 Night
- Modular Integration for Manned & Unmanned Platforms
- Rugged Design, Hermetic Sealed IP-67, Nitrogen Purged
- Ethernet Interface, RTSP Streaming, Daisy Chain
- 9-36VDC Power Input

FUSION SERIES

RUGGED DAY & NIGHT DRIVER VISION ENHANCER AND ELECTRO-OPTIC TRACKER

	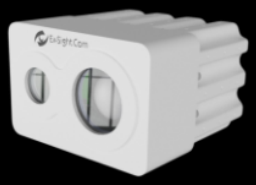	
MODEL	**FUSION1280**	**FUSION640**
DAY SENSOR	4K 8.0MP IMX678 3840x2160 / 30fps M12 LENS 30 fps H.265/H.264/MJPEG	4K 8.0MP IMX678 3840x2160 / 30fps M12 LENS 30 fps H.265/H.264/MJPEG
FOV DAY SENSOR	DC DRIVE M12 FOV (H) 57° or 93°	DC DRIVE M12 FOV (H) 57° or 93°
THERMAL SENSOR	UNCOOLED LWIR 12 µm 1280x1024 LENS 13 mm 30 fps FOV (H) 61° (V) 45,9°	UNCOOLED LWIR 12 µm 640x512 LENS 5,8 mm 30 fps FOV (H) 67° (V) 50,3°
LRF	N/A	N/A
	LWIR DRI	
DETECTION (m) NATO/HUMAN target	830/375	370/167
RECOGNITION (m) NATO/HUMAN target	415/187	185/83
IDENTIFICATION (m) NATO/HUMAN target	311/140	139/62
POWER	9-36VDC, NOMINAL 5.6W (MAX on LOAD 12W)	
DIMENSIONS (mm)	149 x 147 x 96	147 x 117 x 96
CONNECTOR	Stainless Steel Hermetic Connector **D38999/23YC35PN**	
WEIGHT (Kg)	3 Kg	2.3 Kg
IP RATE	IP67 Nitrogen Purged	

FUSION 640

RUGGED DAY & NIGHT DRIVER VISION ENHANCER AND ELECTRO-OPTIC TRACKER

DIMENSIONS: (L x W x H, mm) 147 x 117 x 96
WEIGHT: 2,3 Kg





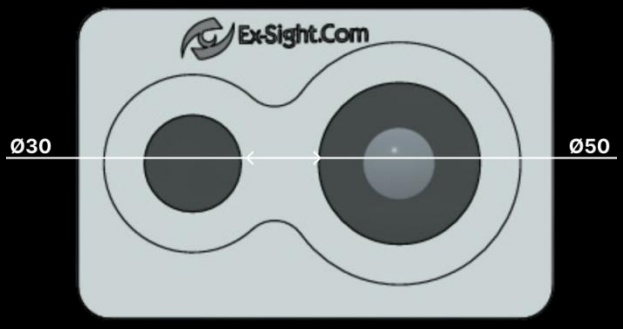

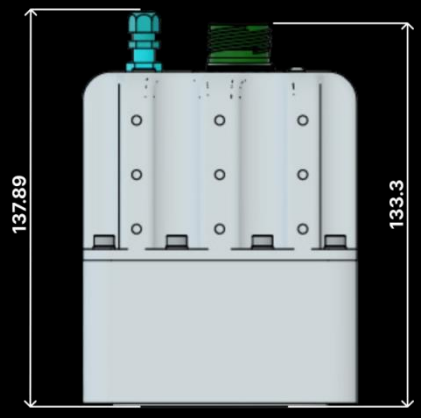

SENSOR POSITIONING

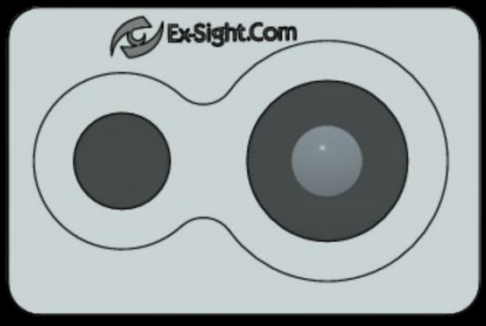

HORIZONTAL



VERTICAL

FUSION SERIES

RUGGED DAY & NIGHT DRIVER VISION ENHANCER AND ELECTRO-OPTIC TRACKER

Bracket Options

DIMENSIONS: (L x W x H, mm) 160 x 134 x 111

FUSION-F-BRKT-01



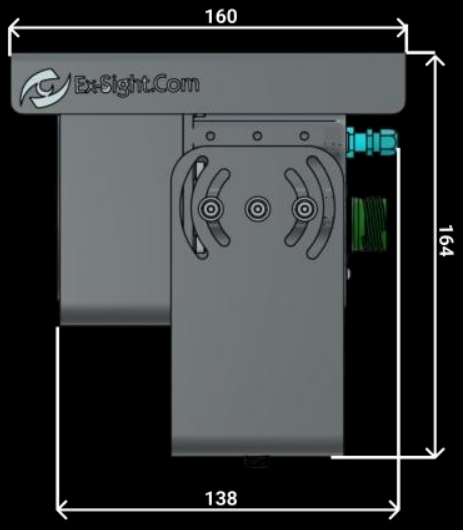

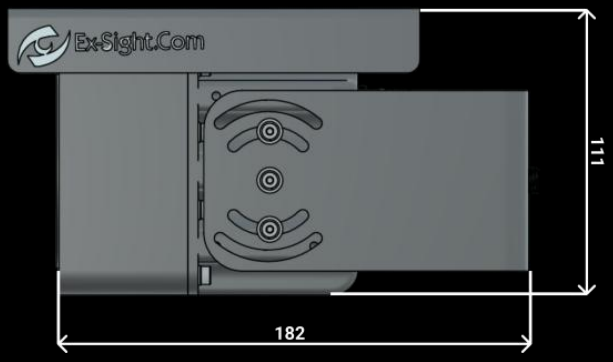

DIMENSIONS: (L x W x H, mm) 190 x 187 x 120

FUSION-F-BRKT-02

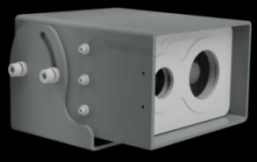



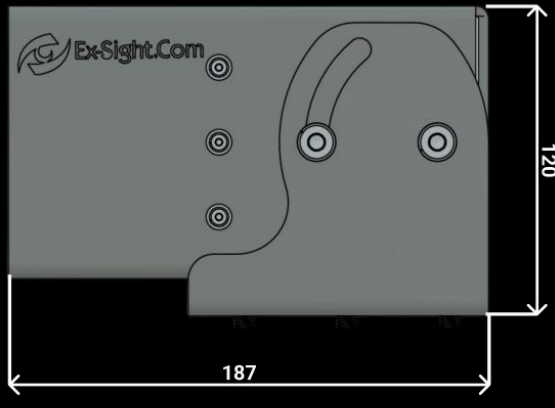



EX-SIGHT ADVANCED ELECTRO-OPTICS

xEye SERIES

RUGGED LWIR/LOW LIGHT ELECTRO-OPTIC SENSOR

xEye SERIES

RUGGED LWIR / LOW LIGHT ELECTRO-OPTIC SENSOR



MODEL	xEye-N Day	xEye-N LWIR	xEye-Z Day	xEye-Z LWIR	xEye
SENSOR	LOW LIGHT	UNCOOLED LWIR	LOW LIGHT	UNCOOLED LWIR	FULL HD
	Up to 3840x2160 / 8MP 4K, IMX678	12 µm 640x512 LENS 5.8 mm	2560x1440 x40 Zoom 4,25mm-170mm	12 µm 1280x1024 LENS 13mm	1920x1080 x36 Zoom 4 mm
		UNCOOLED LWIR	LOW LIGHT	UNCOOLED LWIR	
		12 µm 640x512 LENS 4 mm	2048x1536 x30 Zoom 5,5mm-162mm	12 µm 1280x1024 LENS 9,8mm	
FOV	LOW LIGHT **FOV (4mm)** (H) 93,1° (V) 49,6° (D)110,8°	LWIR **FOV** (5.8mm) FOV 69,4° x 57,3°	LOW LIGHT **FOV** (4,25-170mm) FOV 73,8° to 2,16°	LWIR **FOV (13mm)** FOV 61° x 45,9°	LOW LIGHT **FOV (4mm)** H-FOV 90° V-FOV 46°
	LOW LIGHT **FOV (5 mm)** (H)57,1° (V)30,4° (D) 66,3°	LWIR **FOV** (4mm) FOV 88,4° x74,3°	LOW LIGHT **FOV (5,5-162mm)** FOV 46,5° to 2,2°	LWIR **FOV (9,8mm)** FOV 76,2° x 57,2°	
POWER	9-36 VDC <2W MAX				
OPERATING TEMP	-20°C to +80°C				
DIMENSIONS	90 x 90 x 144 (mm)		100 x 100 x 181 (mm)		62 x 62 x 85 (mm)
INTERFACE	ETHERNET INTERFACE				
CONNECTOR	Hermetic Stainless Steel D38999/23YB35PN				
WEIGHT	1.2 Kg	1.3 Kg	1.4 Kg		0.38 Kg
SEALING	Nitrogen Purged				NONE
IP RATE	IP67				IP66

xEye-N

RUGGED LWIR / LOW LIGHT ELECTRO-OPTIC SENSOR

DIMENSIONS: (L x W x H, mm) 90 x 90 x 144
WEIGHT: 1,2/1,3 Kg



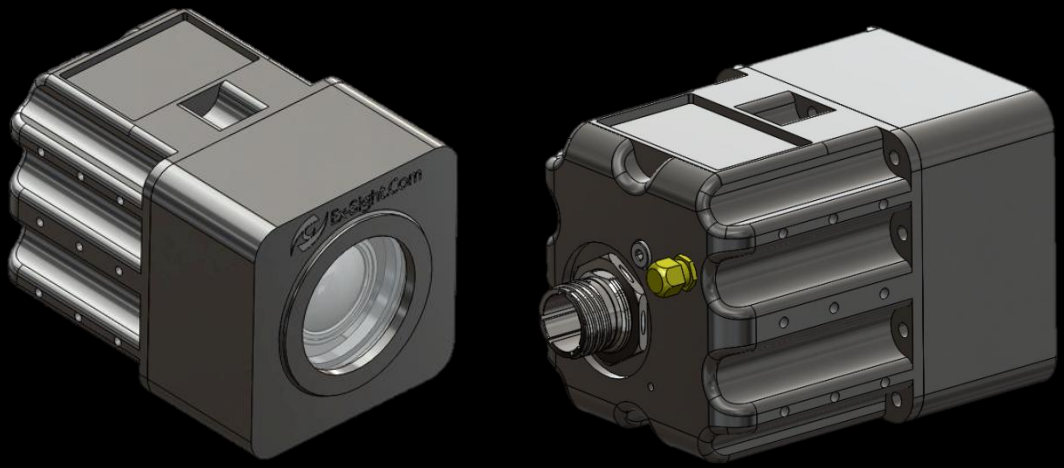

xEye-N with Bracket

RUGGED LWIR / LOW LIGHT ELECTRO-OPTIC SENSOR

DIMENSIONS: (L x W x H, mm) 119 x 160 x 133.5
WEIGHT: 2,3 Kg

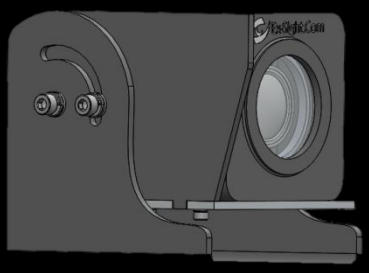



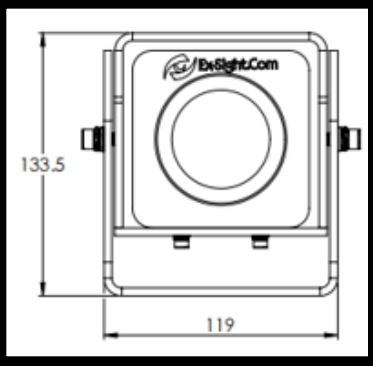

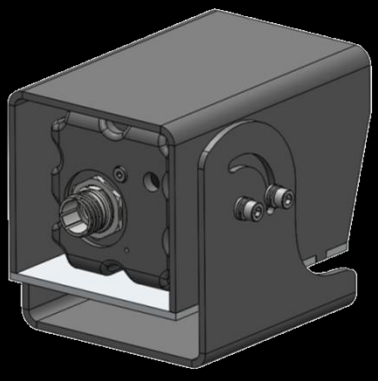

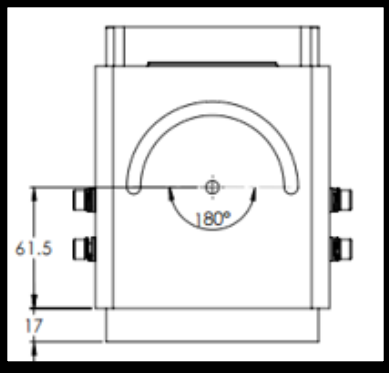



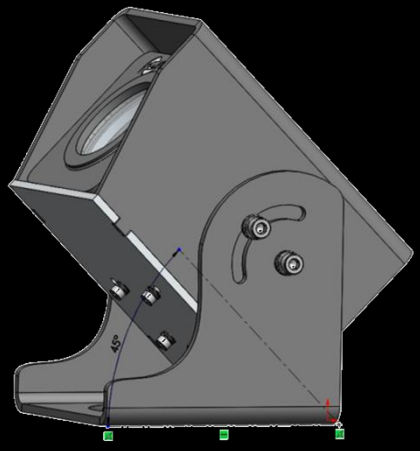

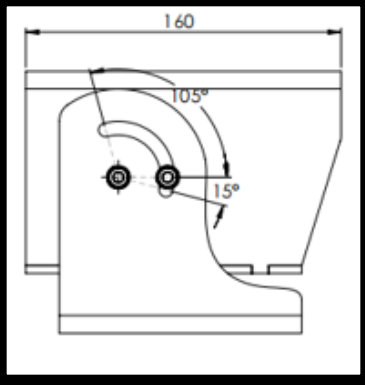

xEye-Z

RUGGED LWIR / LOW LIGHT ELECTRO-OPTIC SENSOR

DIMENSIONS: (L x W x H, mm) 100 x 100 x 181
WEIGHT: 1,4 Kg

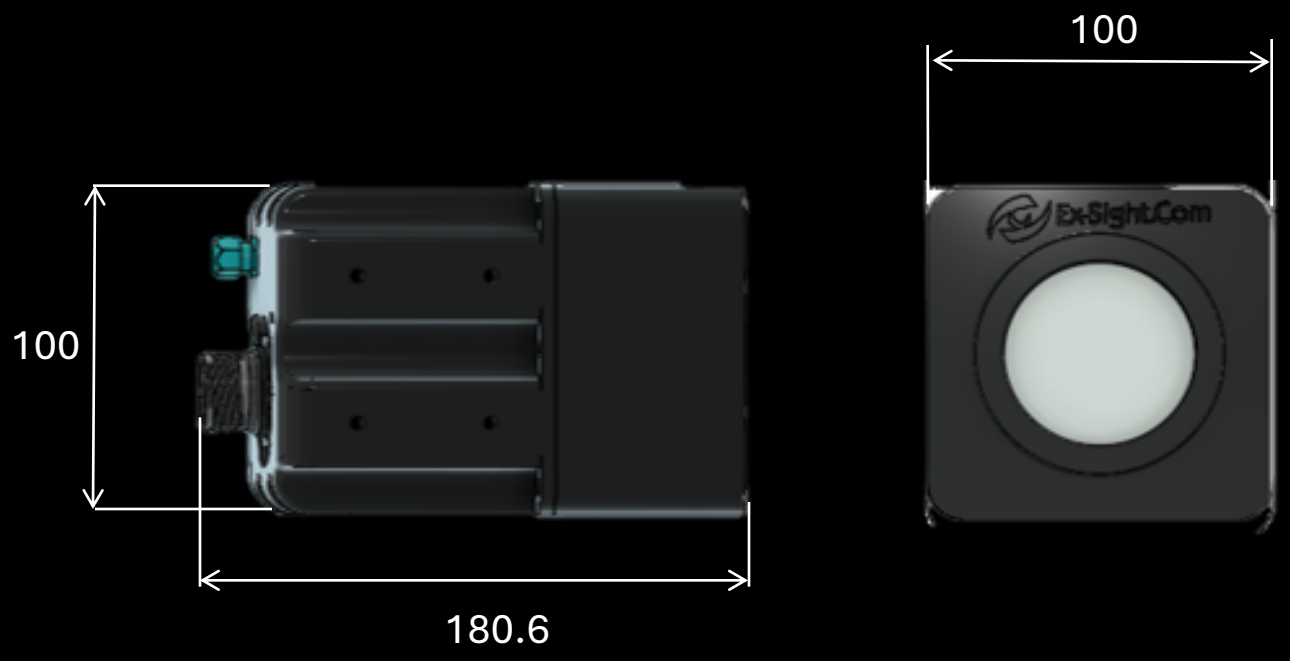



xEye-Z with Bracket

RUGGED LWIR / ZOOM DAY ELECTRO-OPTIC SENSOR WITH BRACKET

DIMENSIONS: (L x W x H, mm) 207 x 152 x 145
WEIGHT: 2,4 Kg

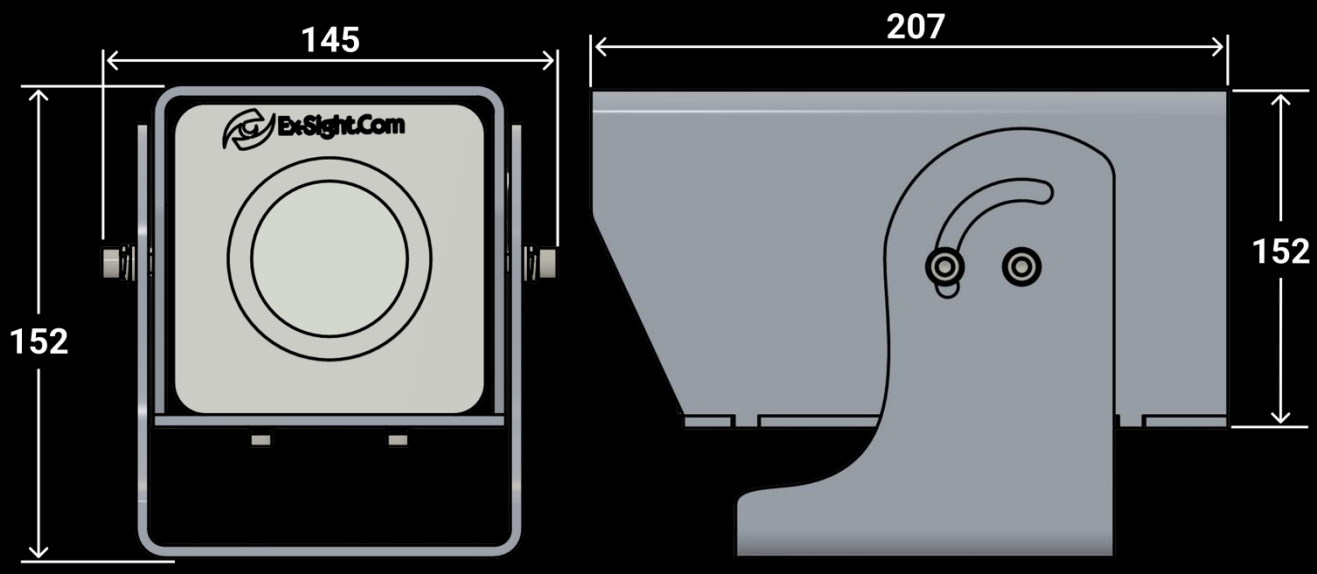

xEye

MICRO RUGGED LOW LIGHT ELECTRO-OPTIC SENSOR

DIMENSIONS: (L x W x H, mm) 62 x 62 x 85
WEIGHT: 0,38 Kg

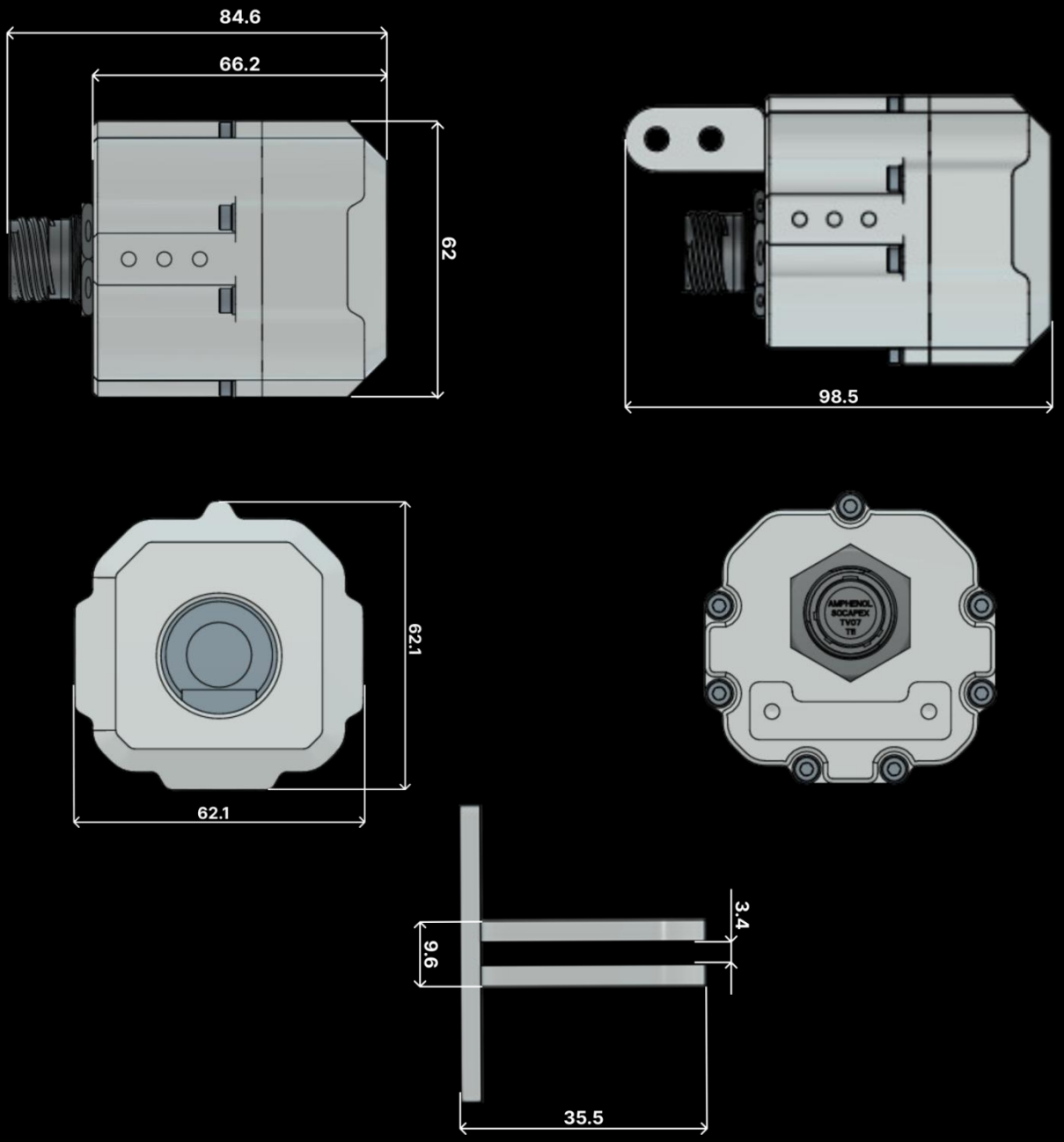

xEye with Bracket

MICRO RUGGED LOW LIGHT ELECTRO-OPTIC SENSOR

BRACKET DIMENSIONS

xEye-BRKT-M/MS
xEye-BRKT-[BT]

M MATTE BLACK RAL 9005 ALUMINUM BRACKET
MS BLACK STEEL BRACKET



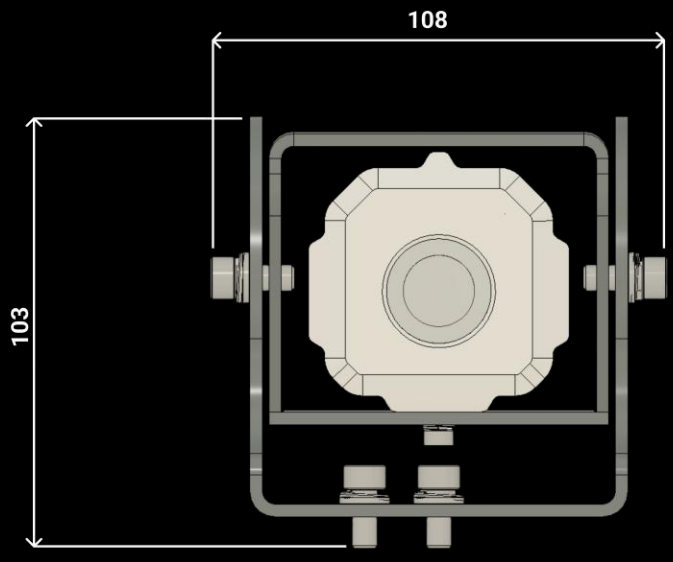

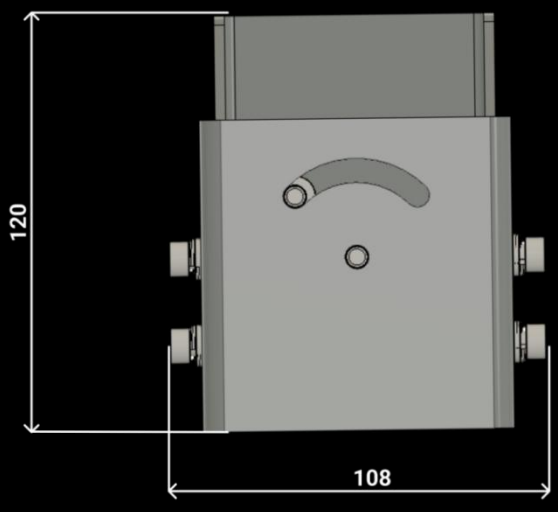

EX-SIGHT ADVANCED ELECTRO-OPTICS

Aix SERIES

RUGGED AI NEURAL PROCESSING UNIT



EX-SIGHT ADVANCED ELECTRO-OPTICS

Aix SERIES

RUGGED AI NEURAL PROCESSING UNIT






MODEL	Aix NPU	Aix GPU	Aix NPU2	Aix NPU-360Kit
OS	MICROSOFT WINDOWS 11	UBUNTU LINUX	MICROSOFT WINDOWS 11	MICROSOFT WINDOWS 11
CPU	Intel® Core™ Ultra	NVIDIA ORIN 64GB FORECR.IO	Intel® Core™ Ultra	Intel® Core™ Ultra
RAM	64GB	64GB	64GB	64GB
STORAGE SSD	1TB	256GB	1TB	1TB
DISPLAY	2 x HDMI 2.1 TMDS	HDMI 2.0 (MAX RESOLUTION 3840x2160)	5 x 4K	2 x HDMI Ports MIL.STD Connector
ETHERNET	2.5 Gigabit LAN	1x Gigabit Ethernet	2.5 Gb Ethernet port	2.5 Gigabit LAN
PERIPHERALS	1 x USB4 2 x M.2 Key M, 1 x M.2 Key E (WiFi-6E Module) 2 x HDMI 2.1 TMDS 1 x DP 2.1 (from Type-C) 1 x DP 1.4a (from Type-C)	2x USB 3.1 Type-A 1x CAN Bus 1x RS232/422/485 (software configurable) 2x USB-C (Debug/Recovery) 2x Digital Input 3x Digital Output	2 x USB 3.2 Gen2 Type-A 1 x USB 3.2 Gen2 Type-C 1 x 3.5mm Combo Audio Jack 1 x Thunderbolt 4 Type-C/ DisplayPort TM 2.1 4 x USB 3.2 Gen 2 Type-A 1 x RJ45 LAN 1 x DC-in 1 x Kensington Lock	1 x USB4 2 x M.2 Key M, 1 x M.2 Key E (WiFi-6E Module) 2 x HDMI 2.1 TMDS 1 x DP 2.1 (from Type-C) 1 x DP 1.4a (from Type-C)BUZZER ALARM
POWER SUPPLY	9-40VDC-DC POWER SUPPLY WITH EMI/RFI FILTER			
DIMENSIONS (mm)	221 x 225 x 91	228 x 105 x 277	370 x 328,3 x 139	248 x 263 x 150
OUTPUT VIDEO OPTIONS	HDMI, 2 x FULL HD RTSP (H.264/265) (EMBEDDED HARDWARE)	HD-SDI, HDMI	HDMI 2.1 FRL DP 2.1	HDMI

*Each model is available with a Fan-option

Aix NPU

RUGGED AI NEURAL PROCESSING UNIT

DIMENSIONS: (L x W x H, mm) 221 x 225 x 91
WEIGHT: 6 Kg



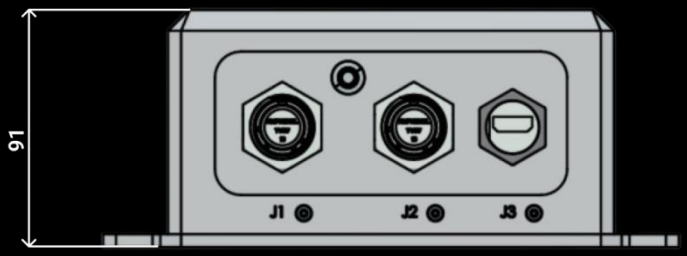

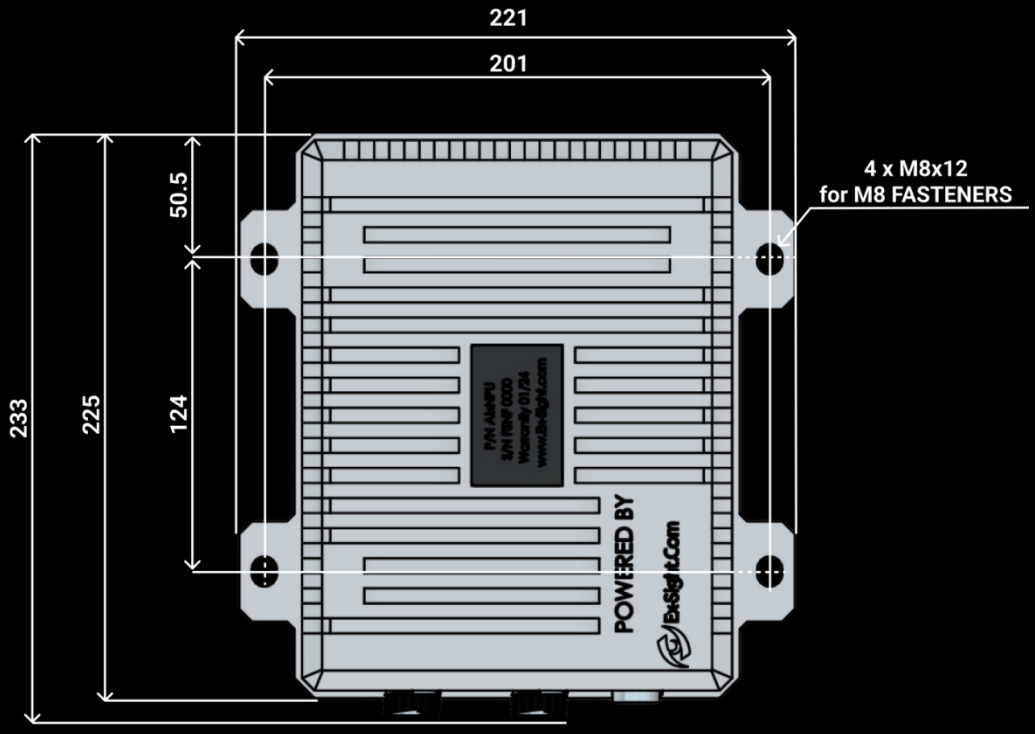

Aix GPU

RUGGED AI NEURAL PROCESSING UNIT

DIMENSIONS: (L x W x H, mm) 228 x 105 x 277
WEIGHT: 8.1Kg

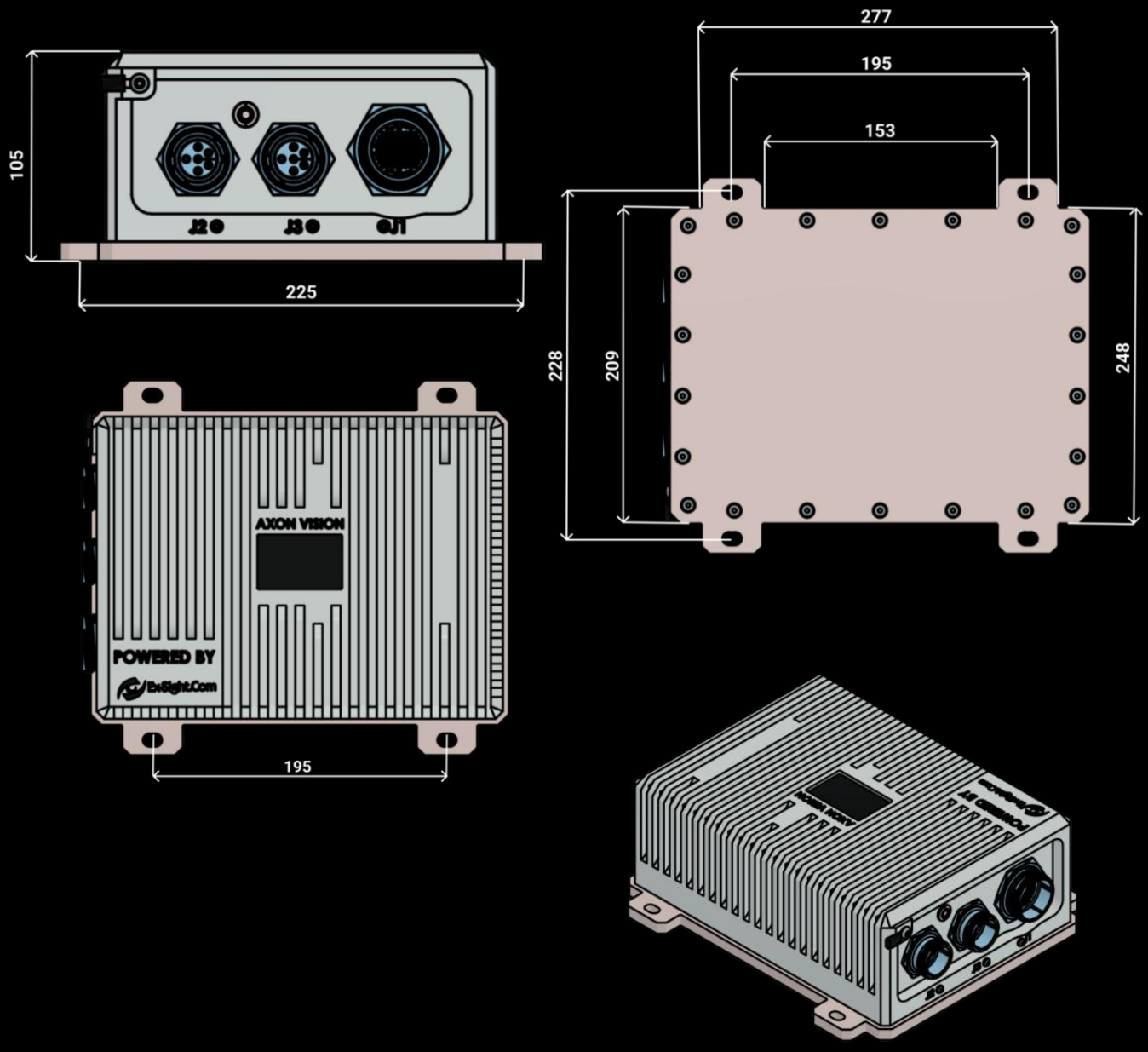

Aix NPU2

RUGGED AI NEURAL PROCESSING UNIT

DIMENSIONS: (L x W x H, mm) 370 x 328.3 x 139
WEIGHT: 14 Kg

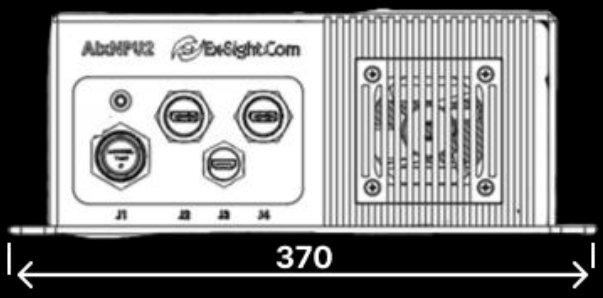

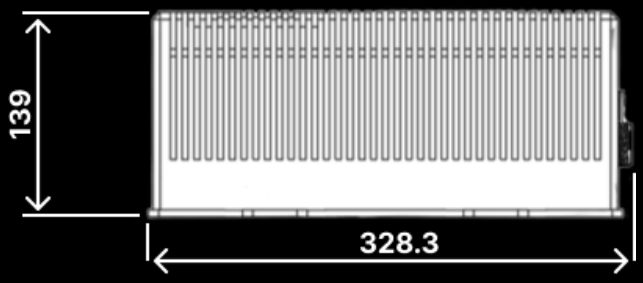

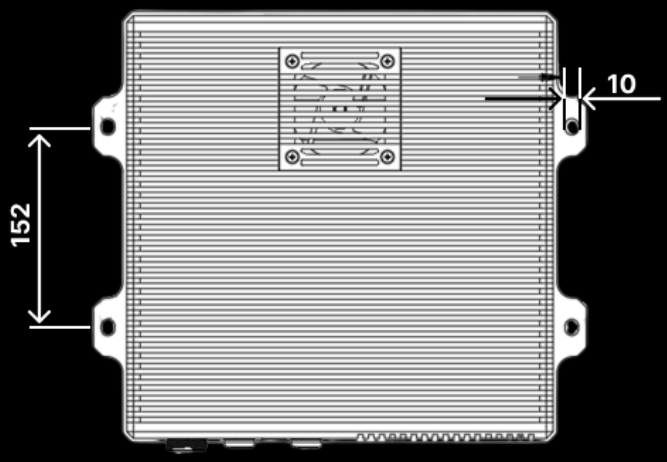



Aix NPU-360Kit

RUGGED AI NEURAL PROCESSING UNIT

DIMENSIONS: (L x W x H, mm) 248 x 263 x 150
WEIGHT: 5 Kg



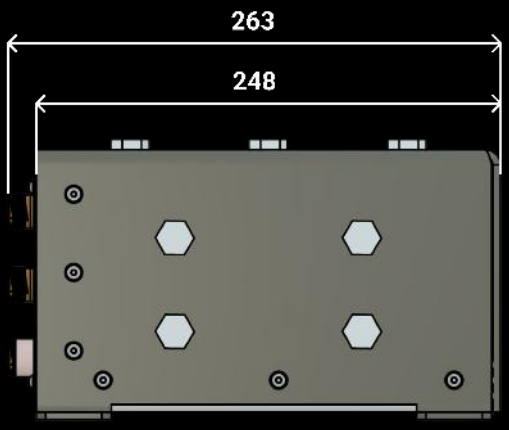

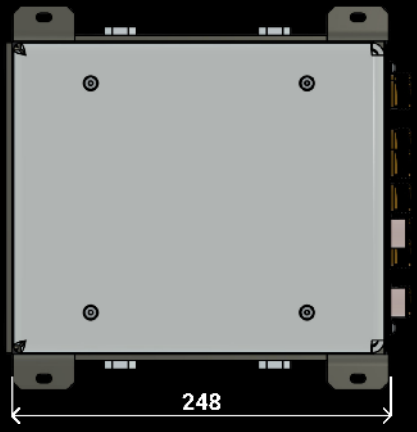



EX-SIGHT ADVANCED ELECTRO-OPTICS

2026 PRODUCT CATALOG

Ex-Sight.Com
ONE SHOT